TECHNICAL DATA SHEET

Product Code: 719354

Product Description: iflo 1200X900 ABS Capped Slimline Tray

Product Specification

Material:
ABS capped acrylic
Stone resin filled

Fittings:
50mm waste hole

Additional Information

Do not clean with abrasive cleaning products

Product with visible defect must not be installed, this will invalidate the guarantee and product cannot be returned.

Slimline 45mm high, 135mm high if used with leg pack

To raise the tray, a leg pack should be used (product code 719372 - sold separately)

If a leg pack is not going to be used, the tray must be installed using sand and cement

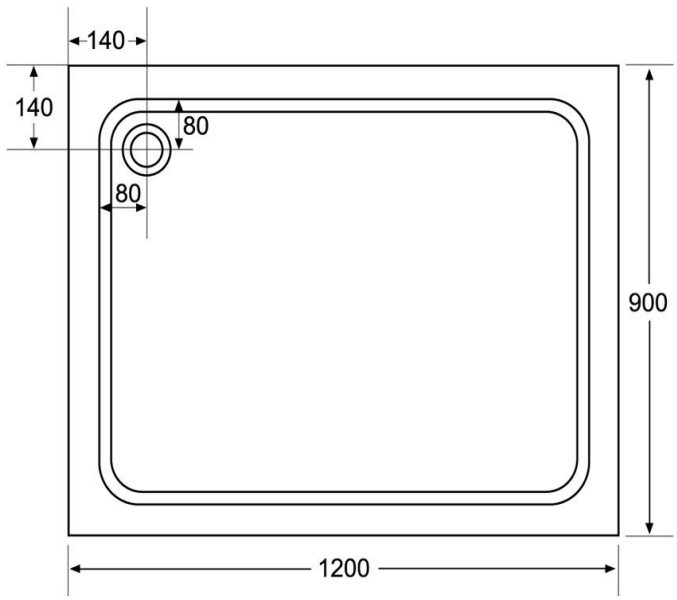

'The information contained within this specification sheet is believed to be correct and complete at the time of creation. All photographs / drawings are as a guide only and do not necessarily represent the products available. Travis Perkins PLC reserves the right to change product details and price without prior notice. E&OE.' [04/2013]