keylite®

Polar

Futuretherm Technology™

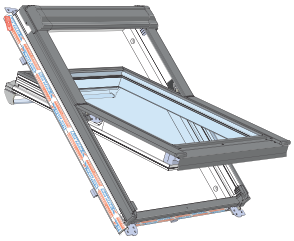

PCP

DoP for product available at: keyliteroofwindows.com/cpr

000mm x 000mm

00kg | 00°-00°

CE EN 14351-1+A1

5 038198 002884

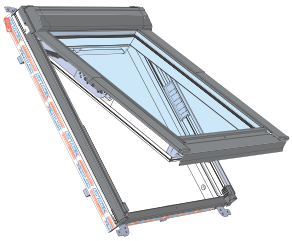

PTH / PFE

DoP for product available at: keyliteroofwindows.com/cpr

000mm x 000mm

00kg | 00°-00°

CE EN 14351-1+A1

5 038198 002884

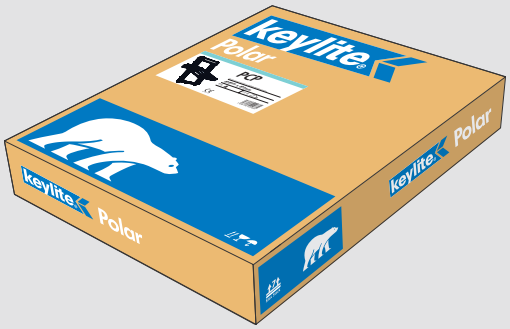

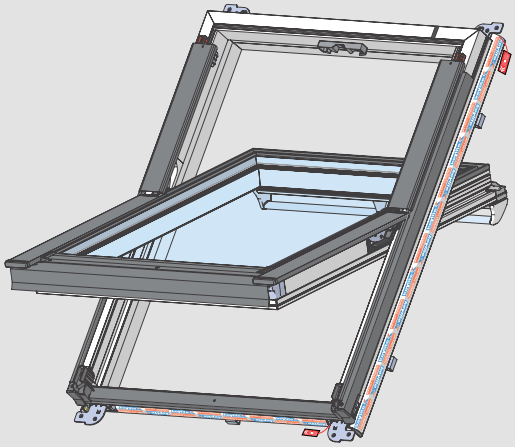

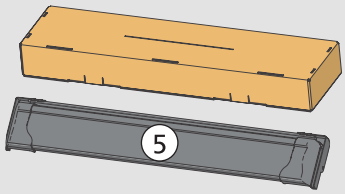

6x 20 mm

36x 13 mm

10x 30 mm

2x 16 mm

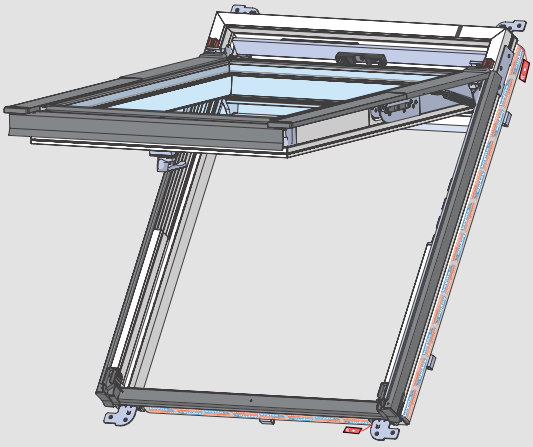

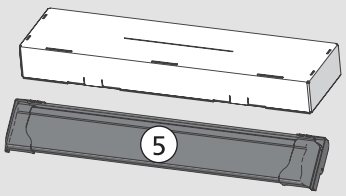

6x 20 mm

36x 13 mm

10x 30 mm

2x 16 mm

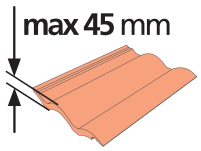

Z = 100 mm

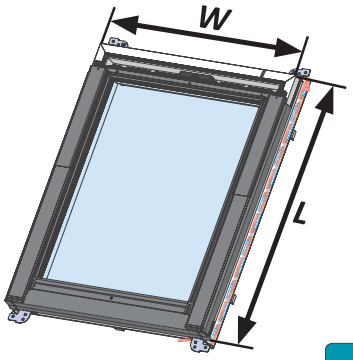

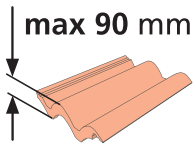

Z = 120 - 140 mm

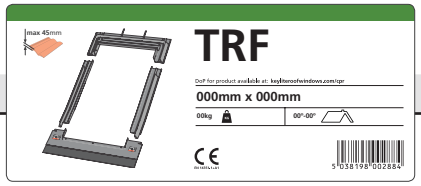

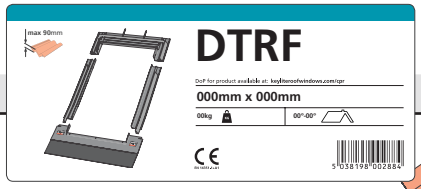

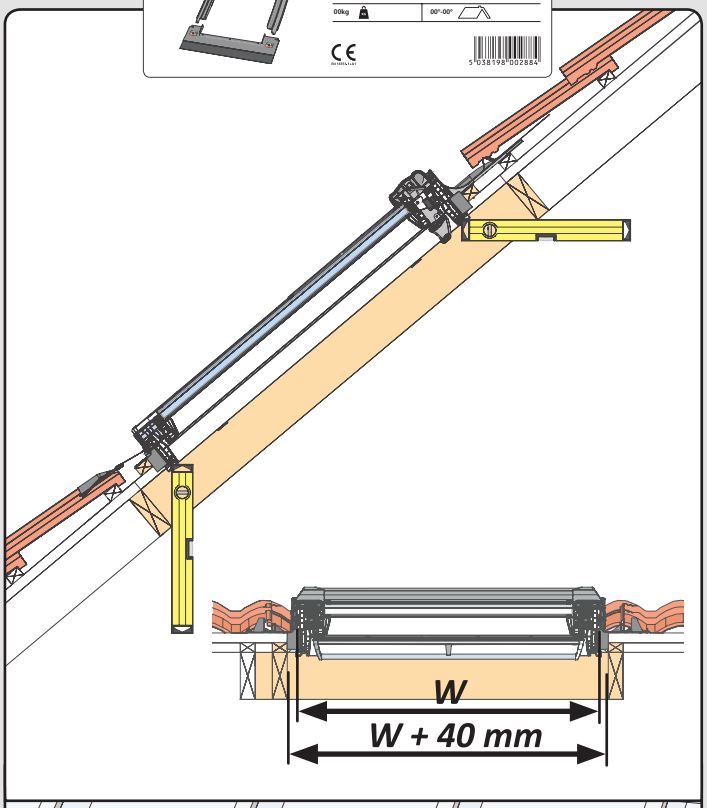

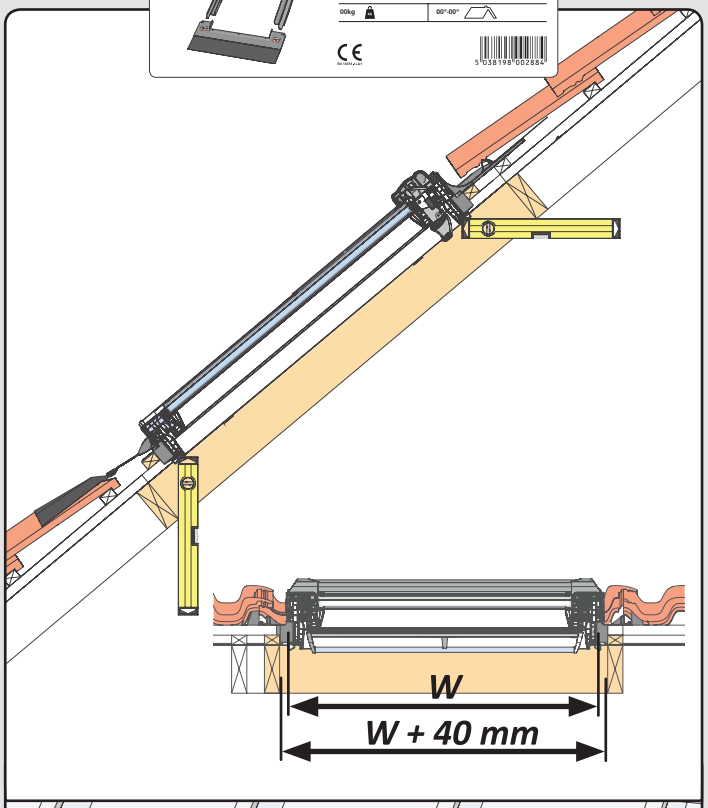

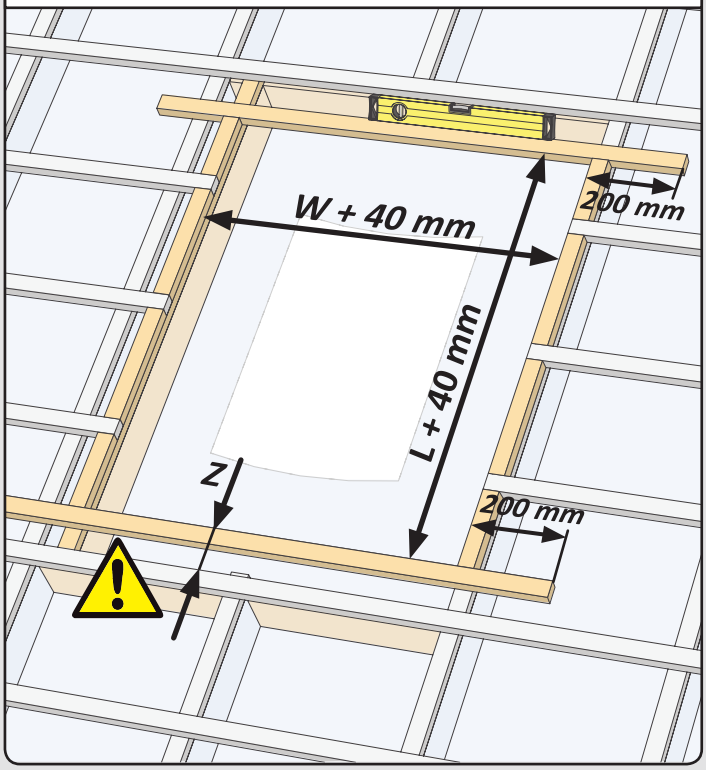

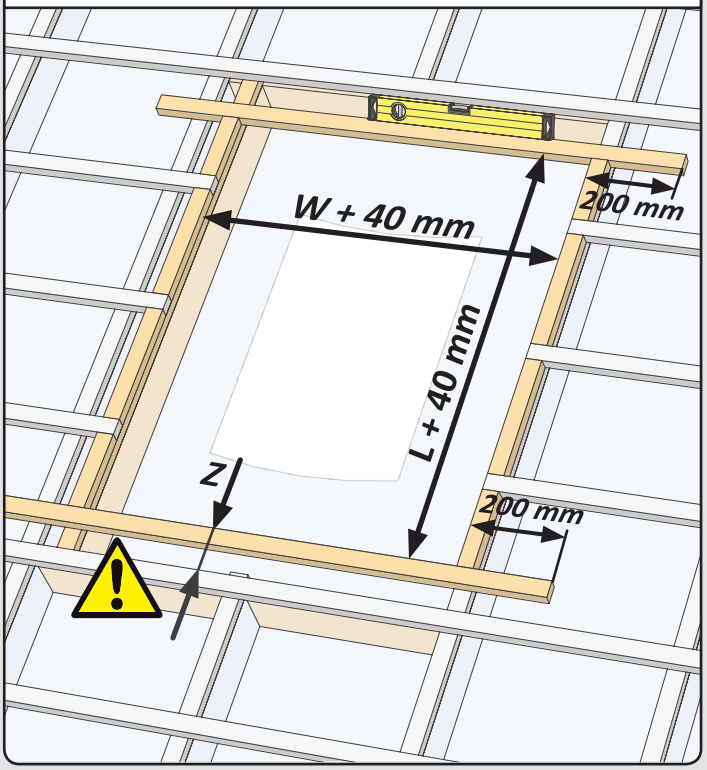

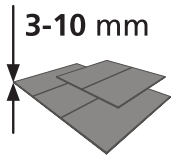
3-10 mm

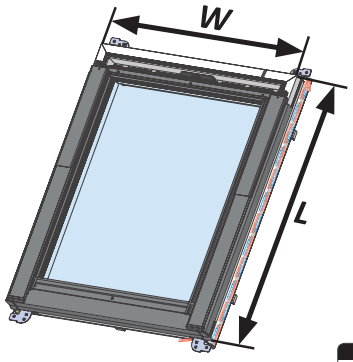
W
L

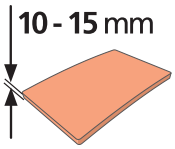
10 - 15 mm

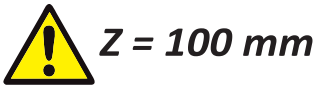
Z = 100 mm

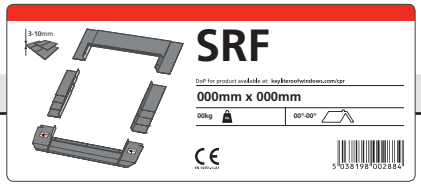
SRF
000mm x 000mm

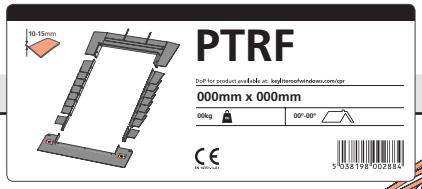
PTRF
000mm x 000mm

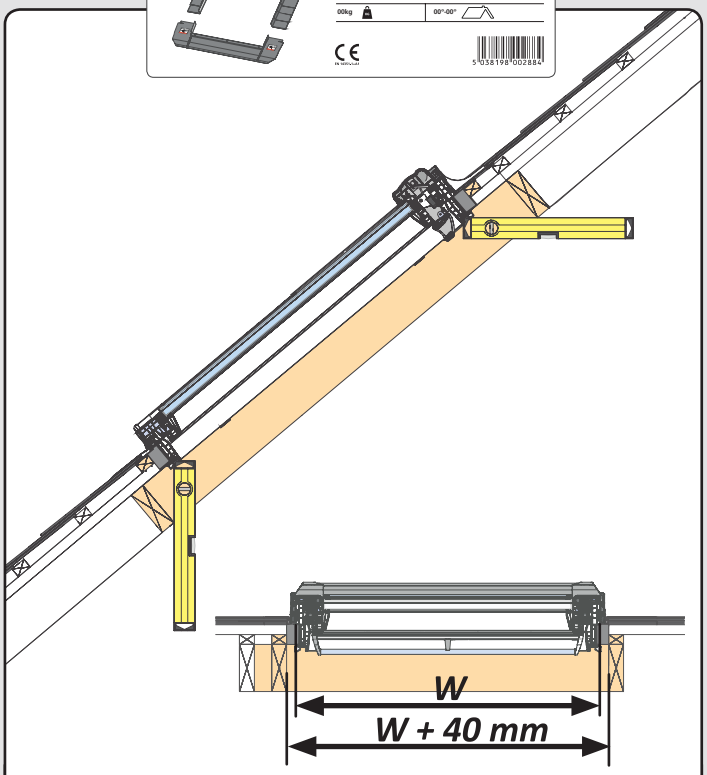
W
W + 40 mm

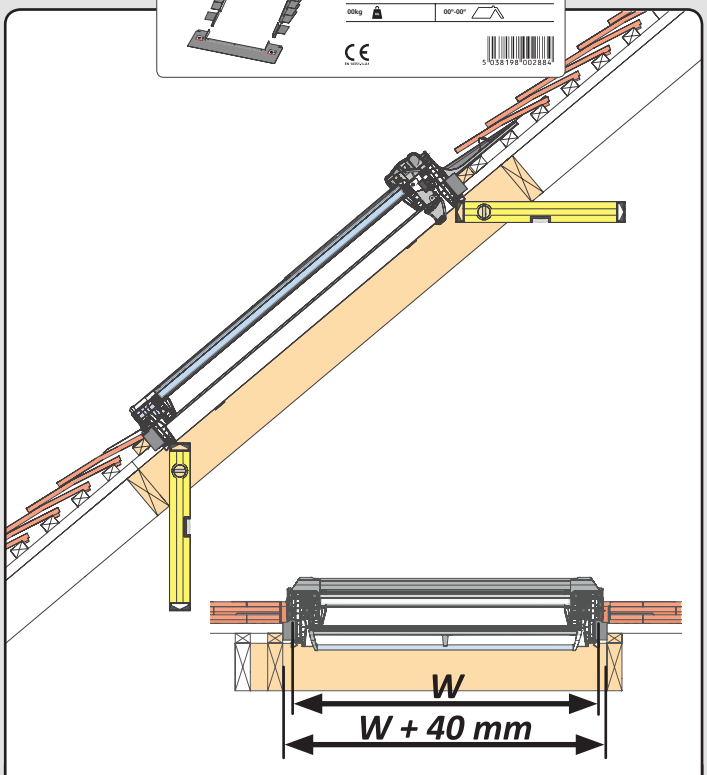
W
W + 40 mm

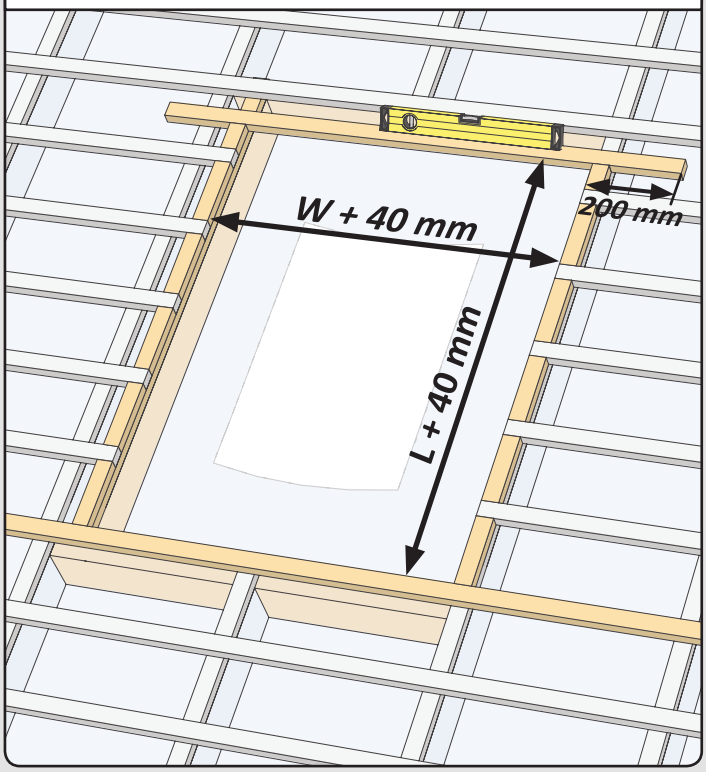
W + 40 mm
200 mm
L + 40 mm

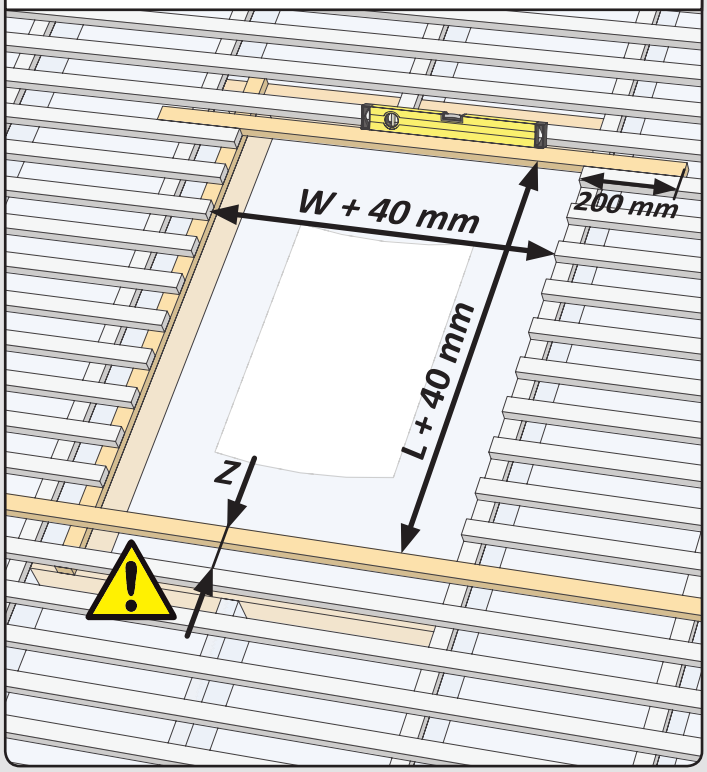
W + 40 mm
200 mm
L + 40 mm
Z

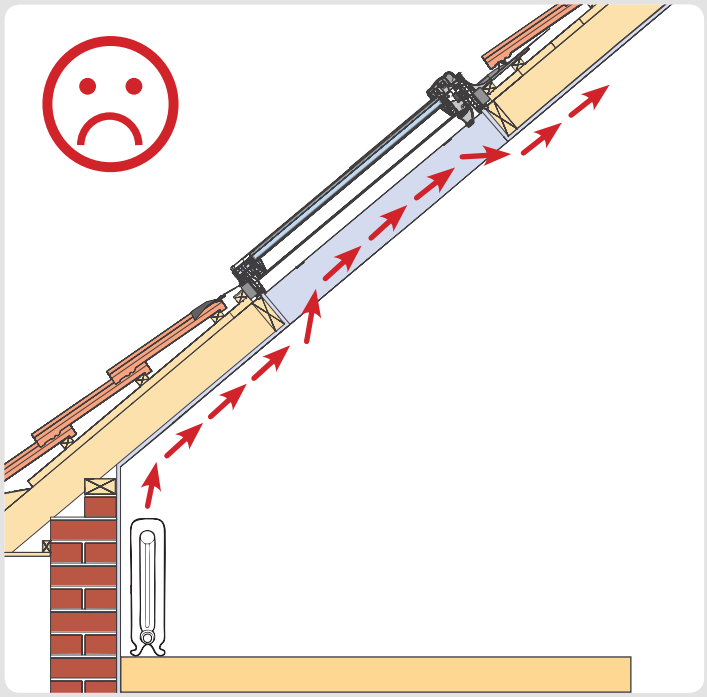

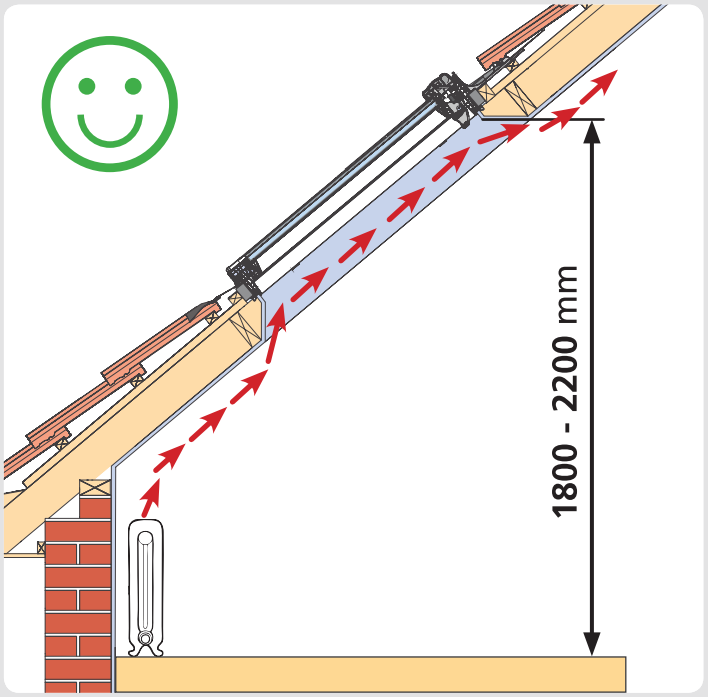
1800 - 2200 mm

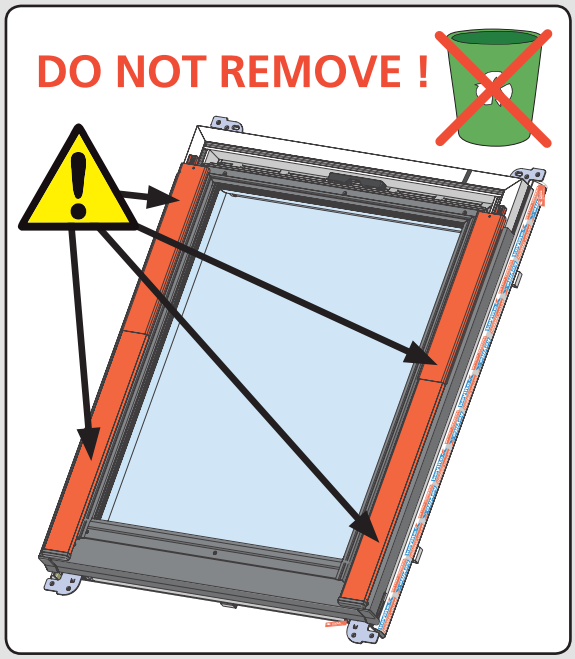
DO NOT REMOVE !

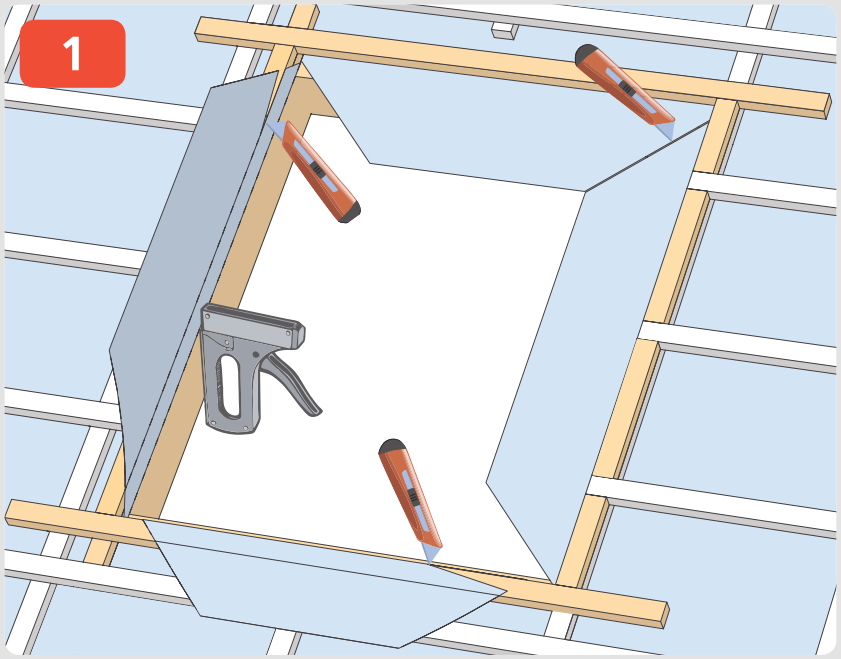
1

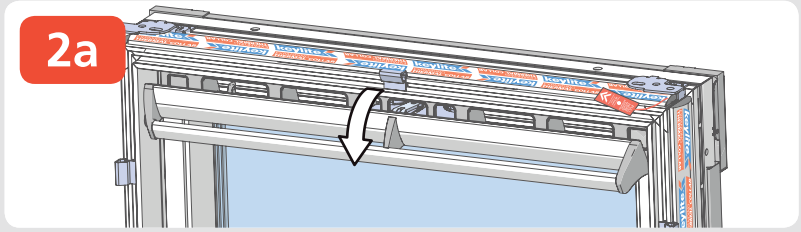
2a

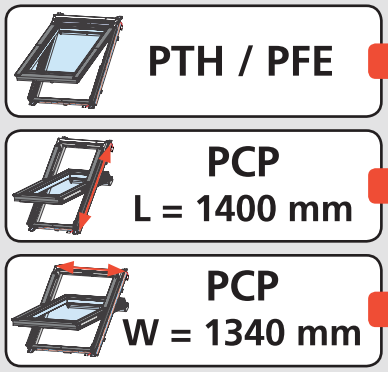
PTH / PFE
PCP
L = 1400 mm
PCP
W = 1340 mm

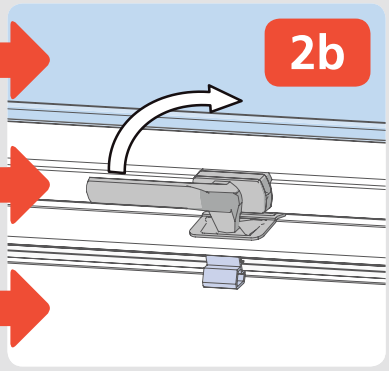
2b

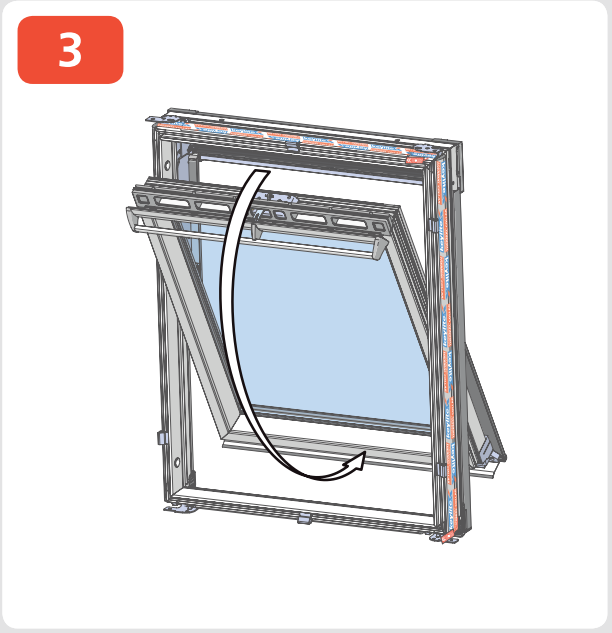
3

4

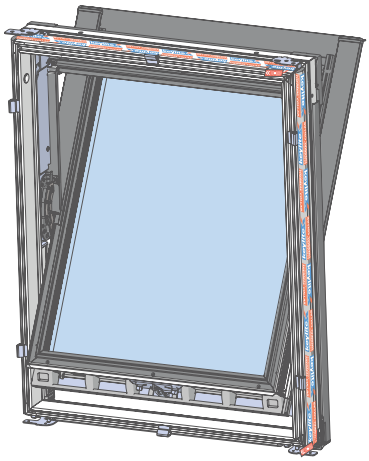

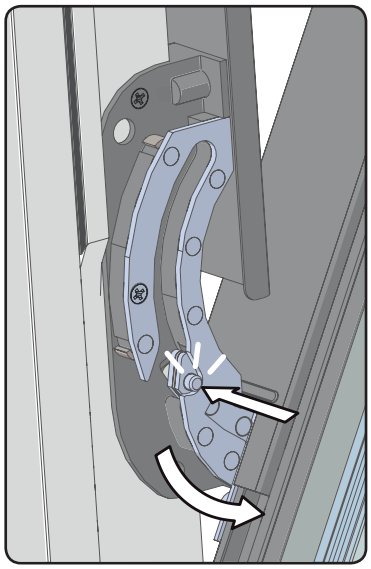

5

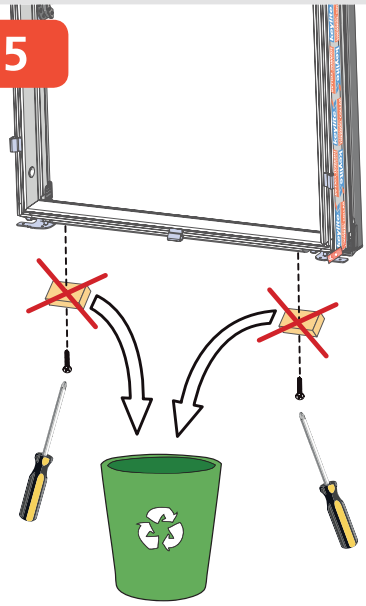

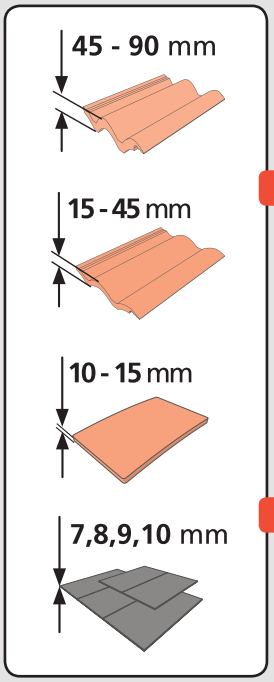

6a

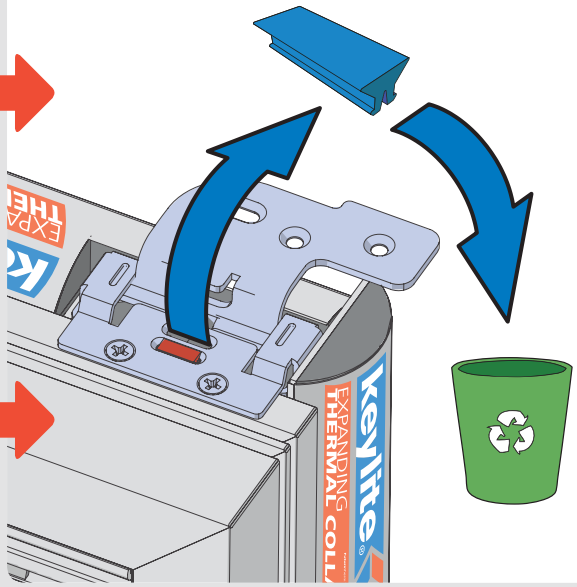

7a

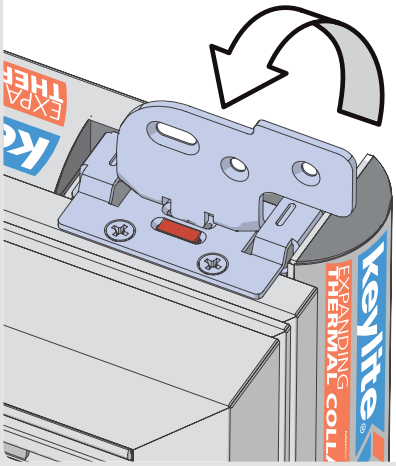

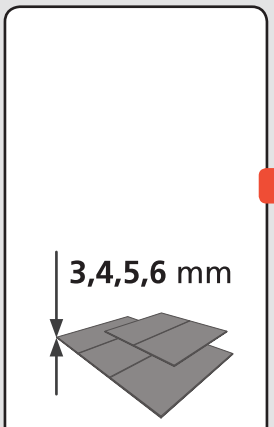

6b

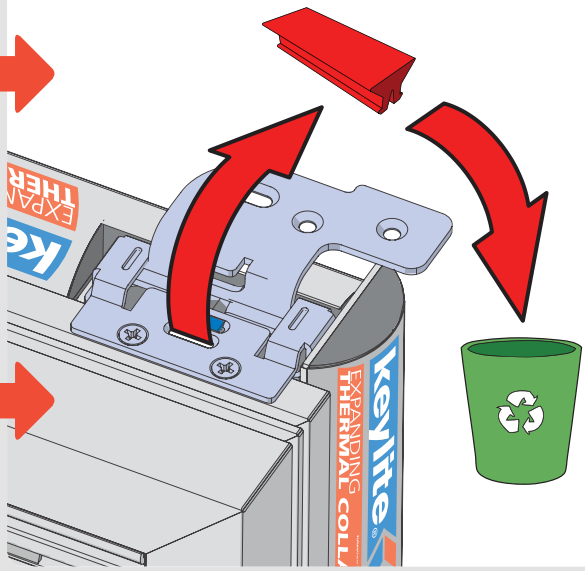

7b

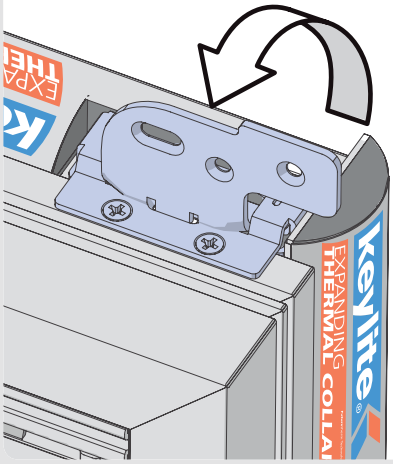

8

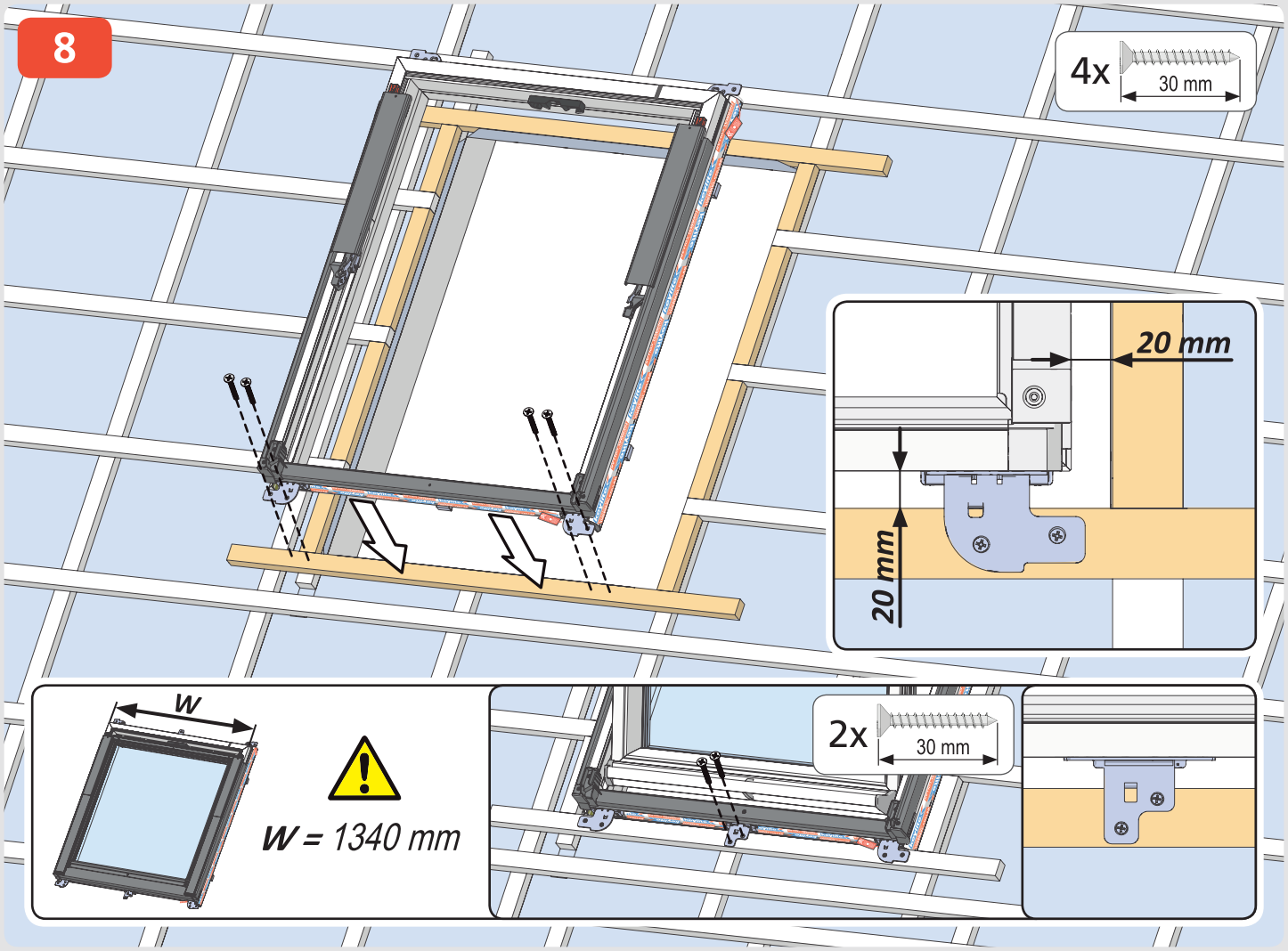

9

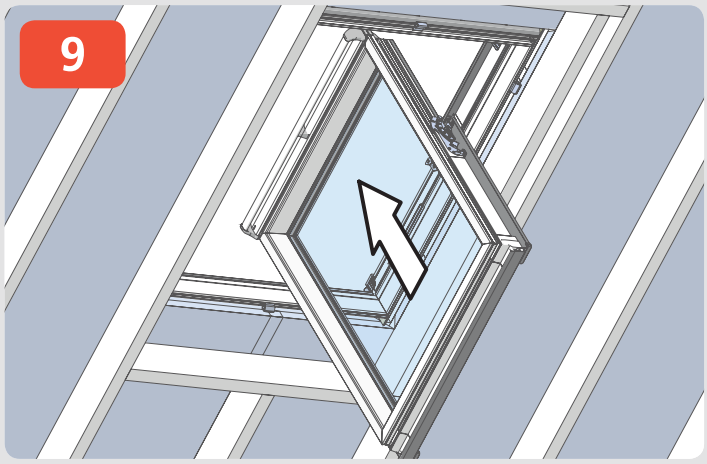

10

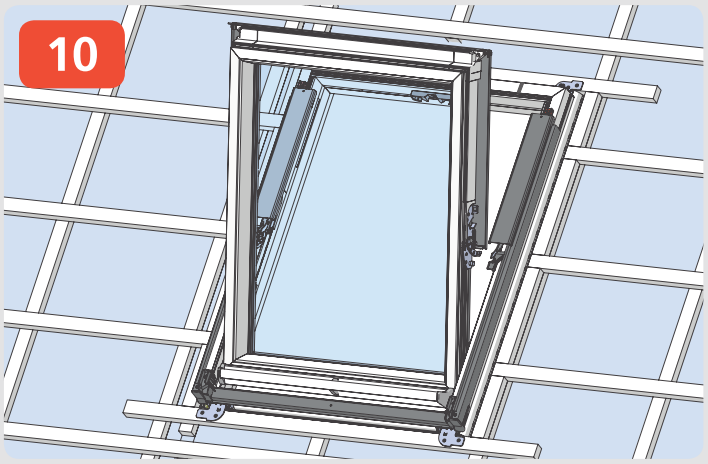

11

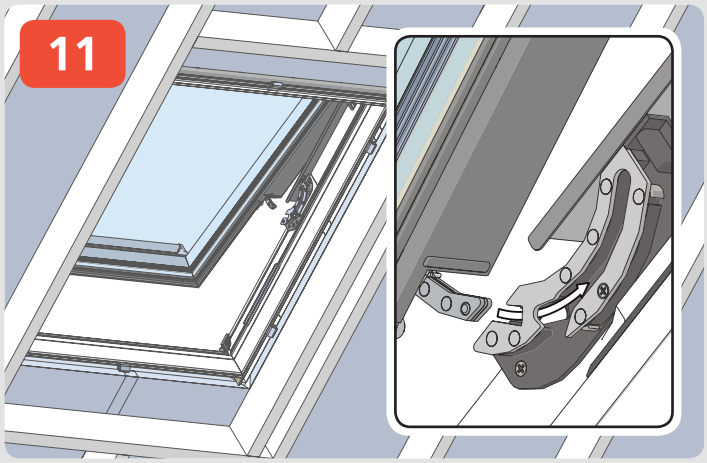

12

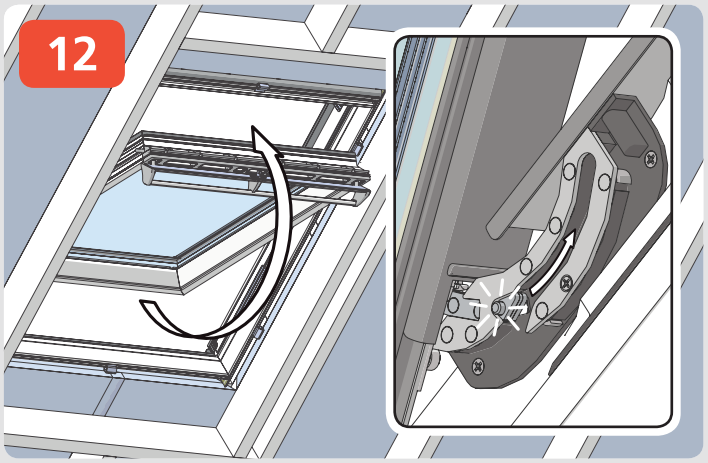

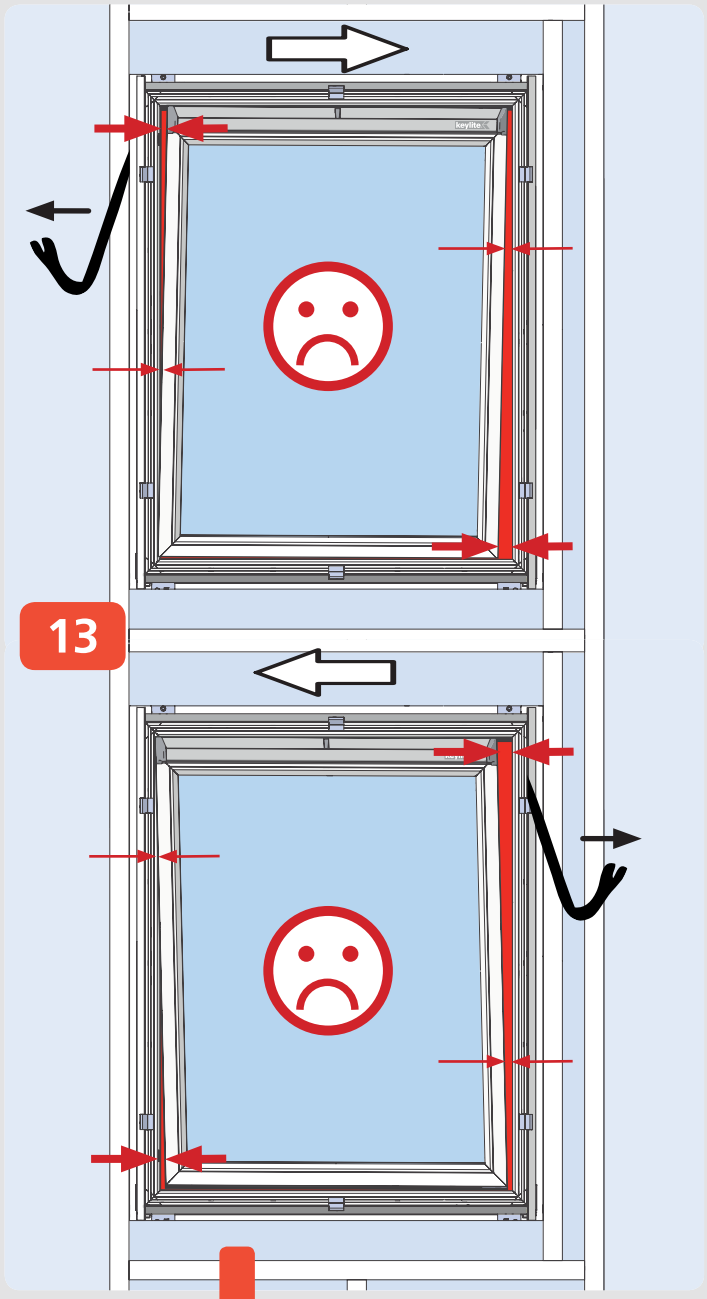
13

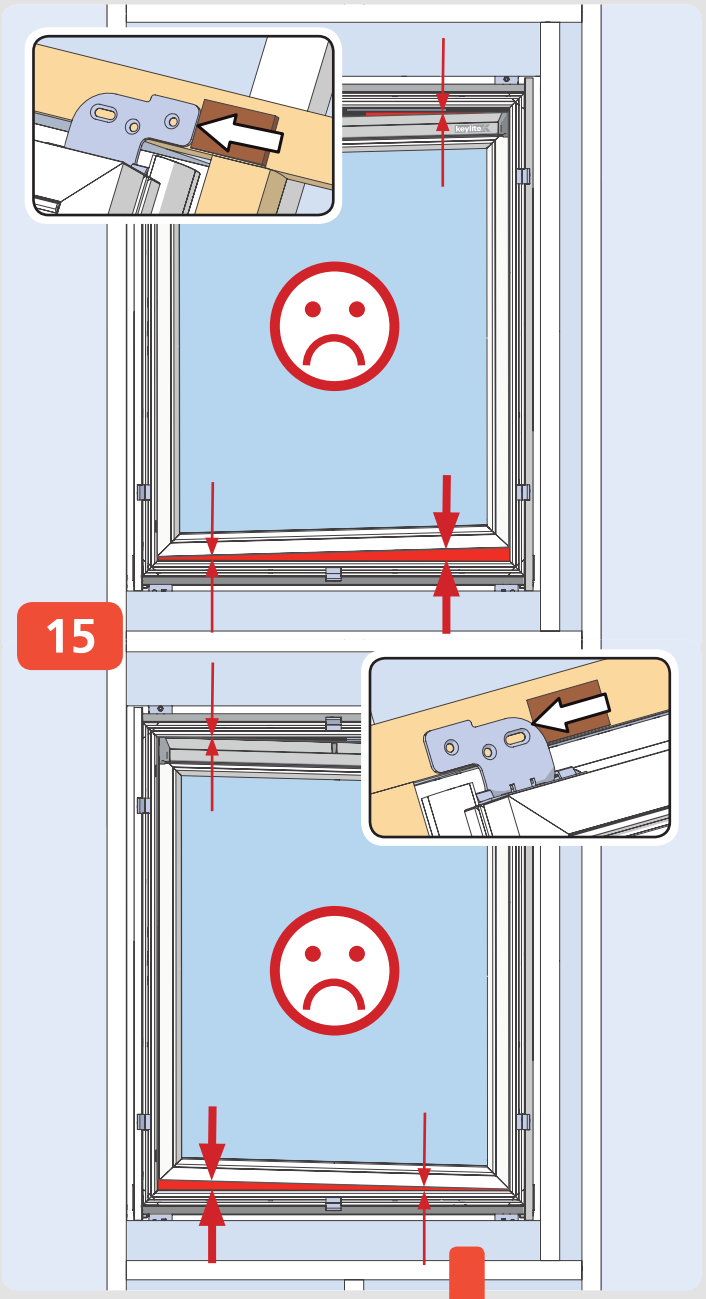
15

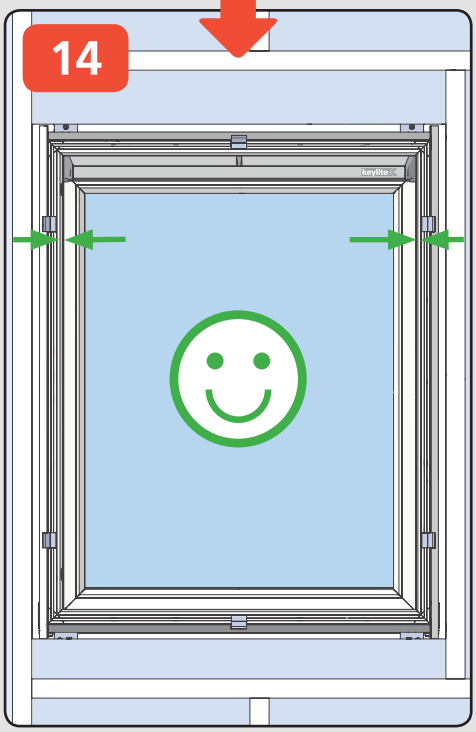
14

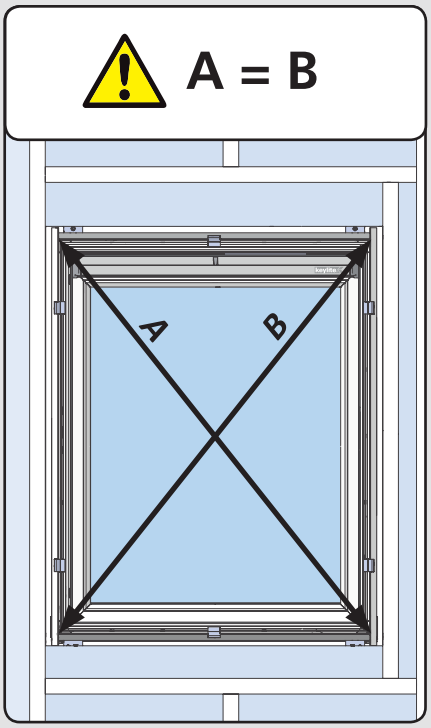
A = B
A
B

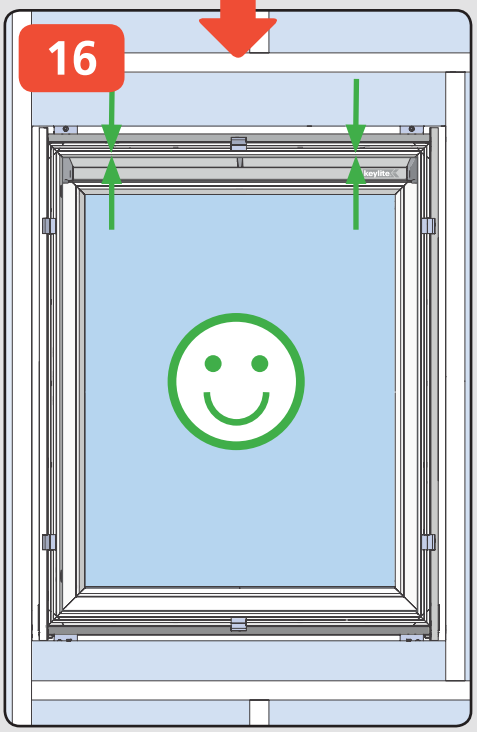
16

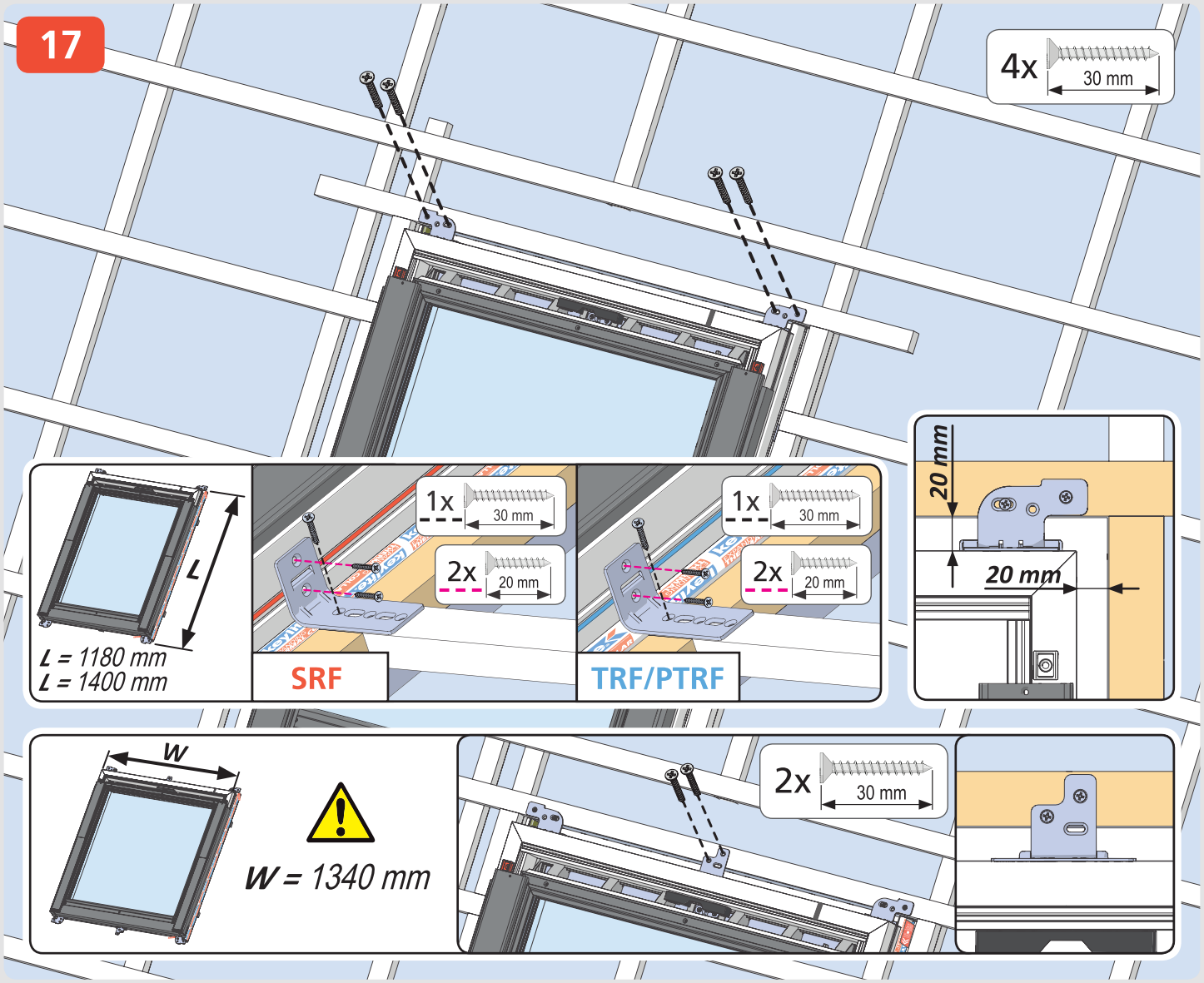
17
4x
30 mm
L
L = 1180 mm
L = 1400 mm
1x
30 mm
2x
20 mm
SRF
1x
30 mm
2x
20 mm
TRF/PTRF
20 mm
20 mm
W
W = 1340 mm
2x
30 mm

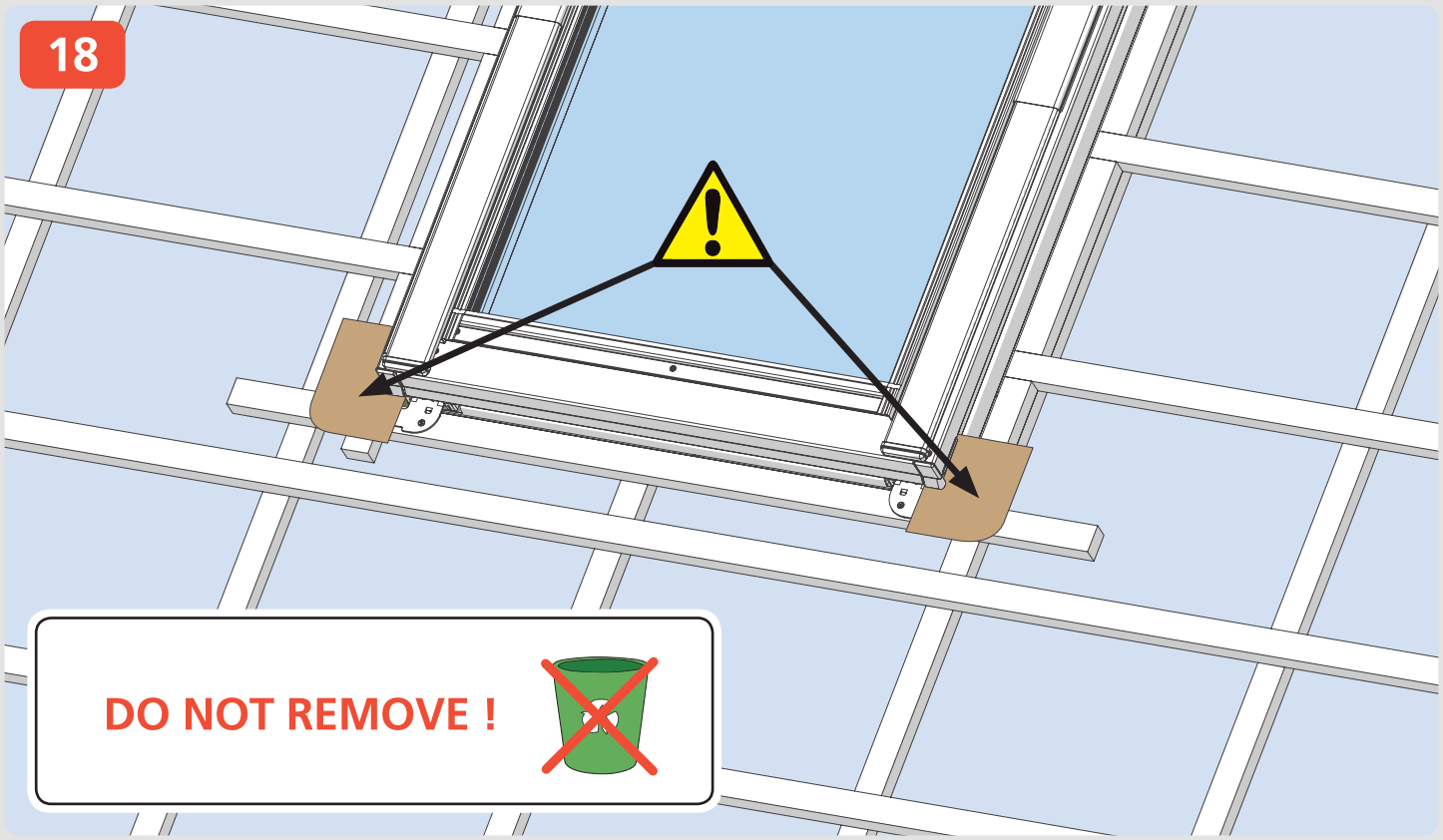
18
DO NOT REMOVE !

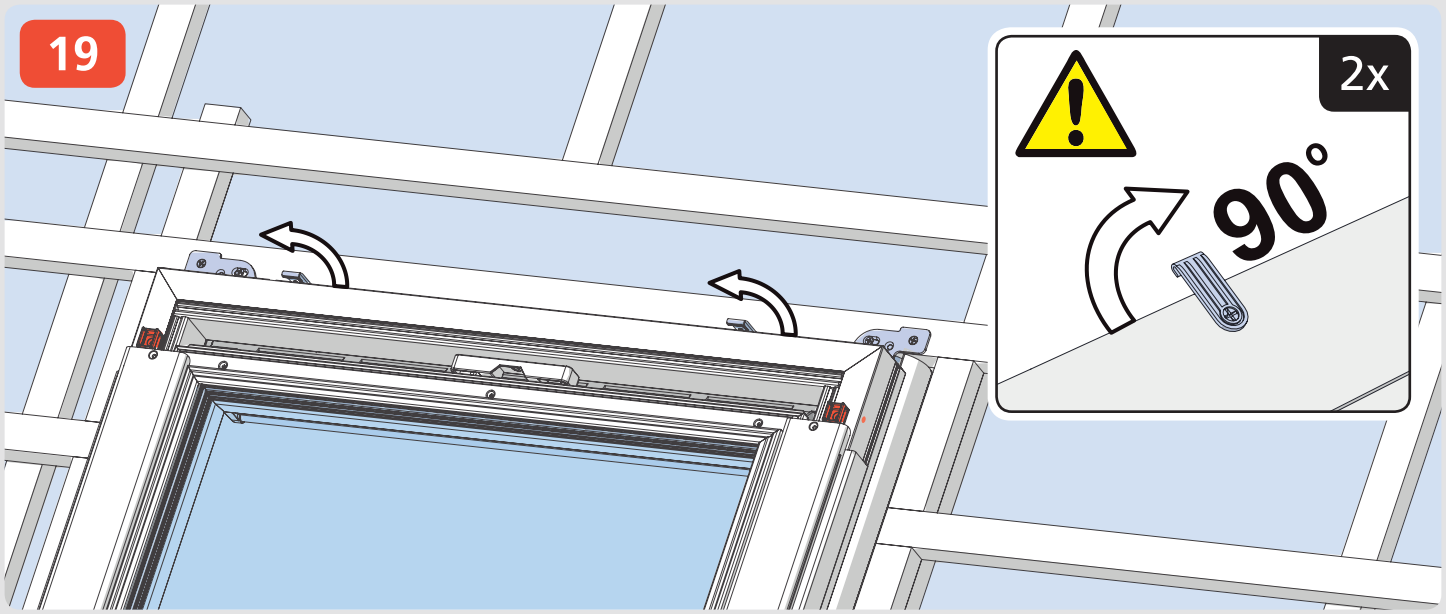
19
2x
90°

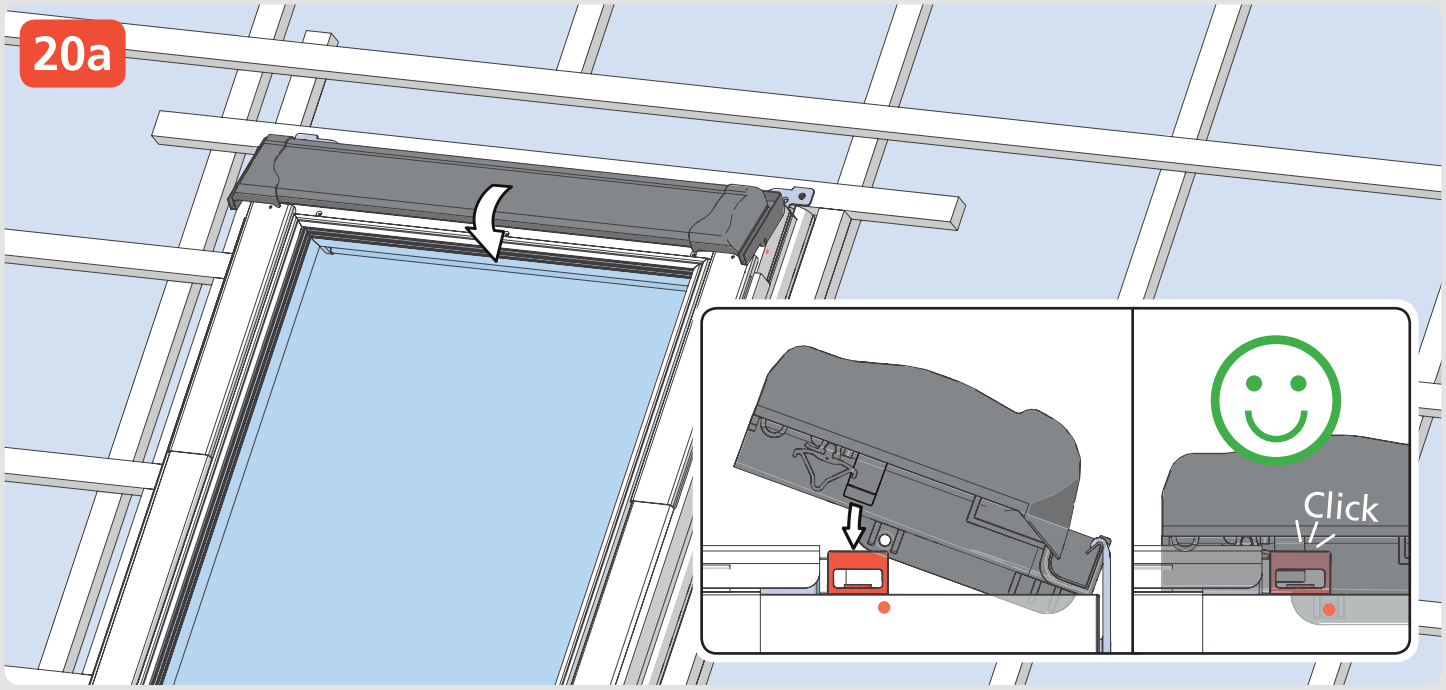
20a
Click

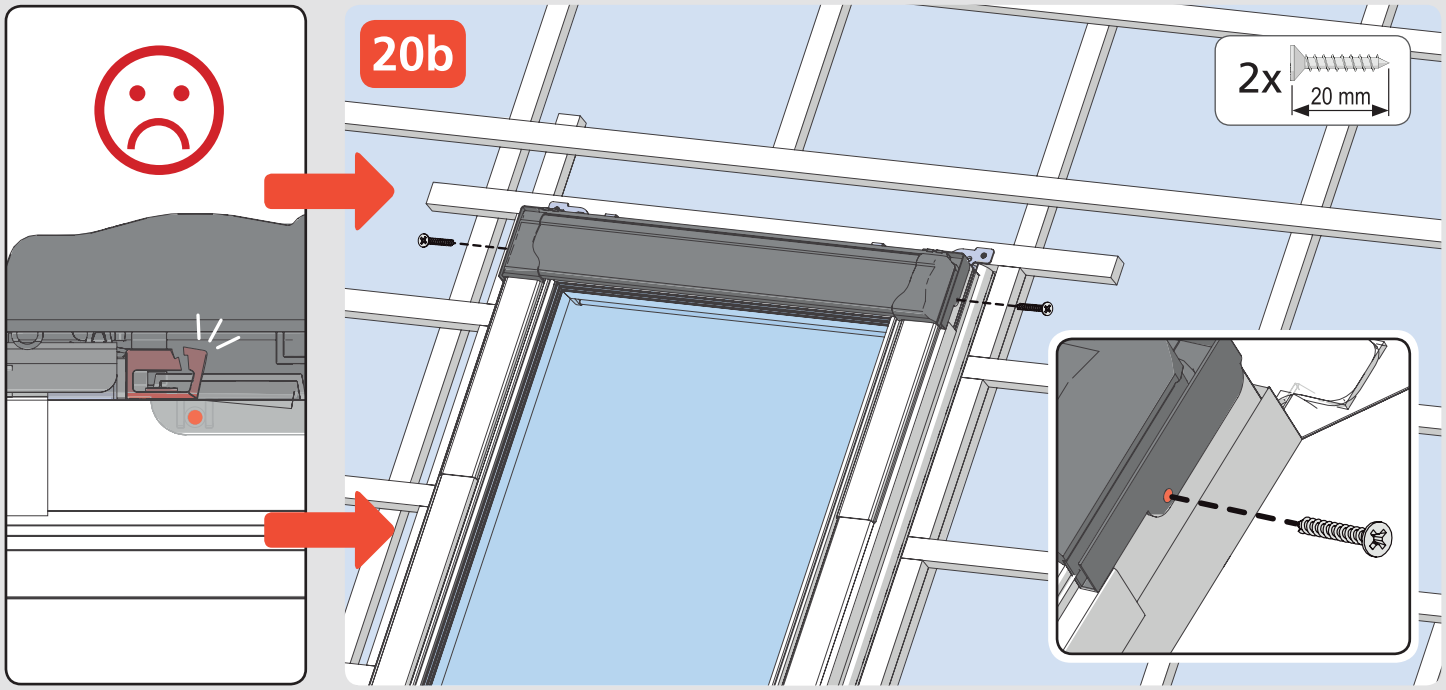
20b
2x
20 mm

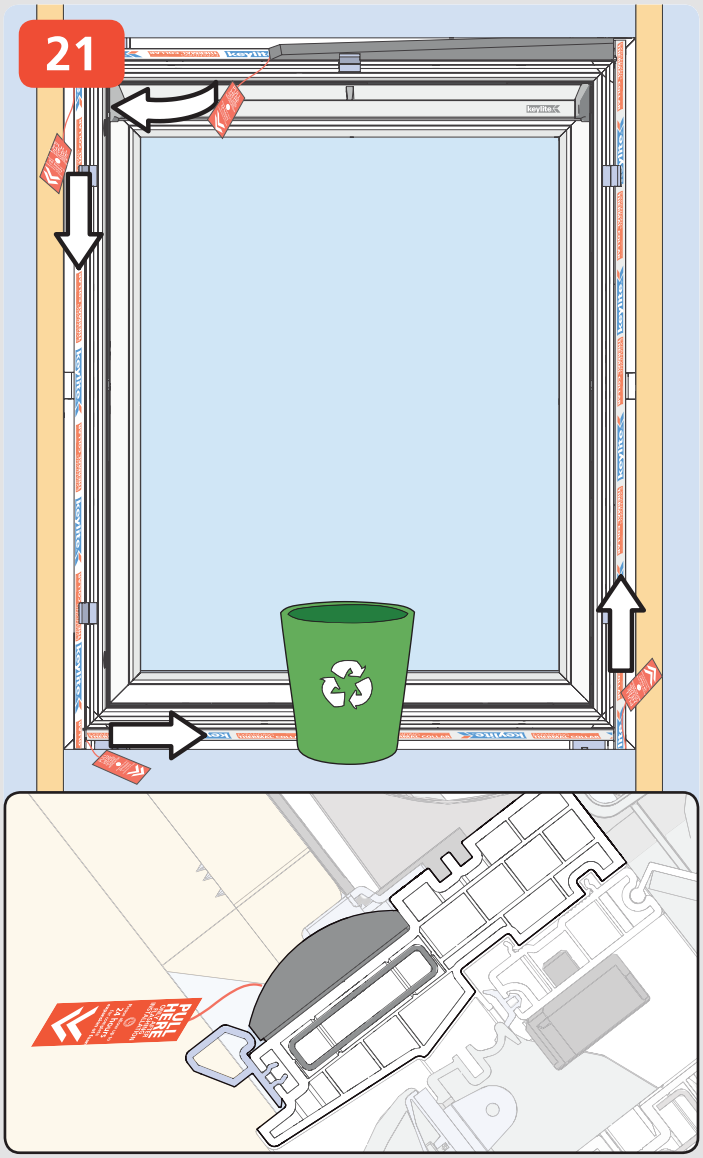
21
PULL

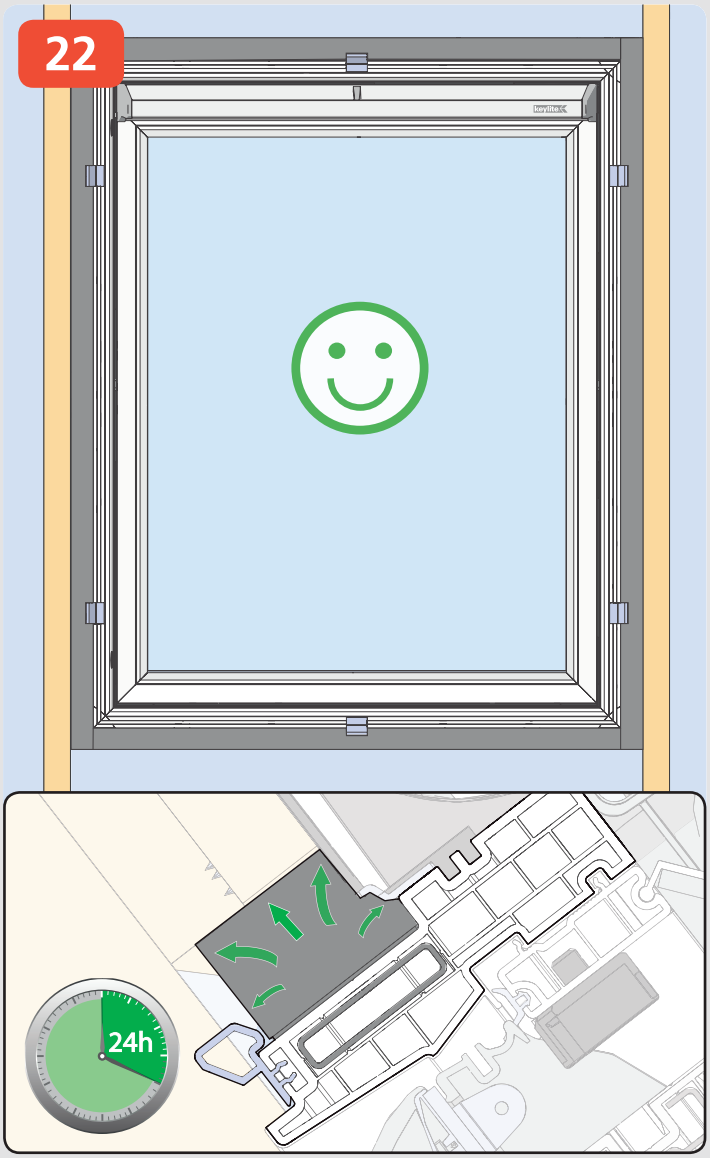
22
24h

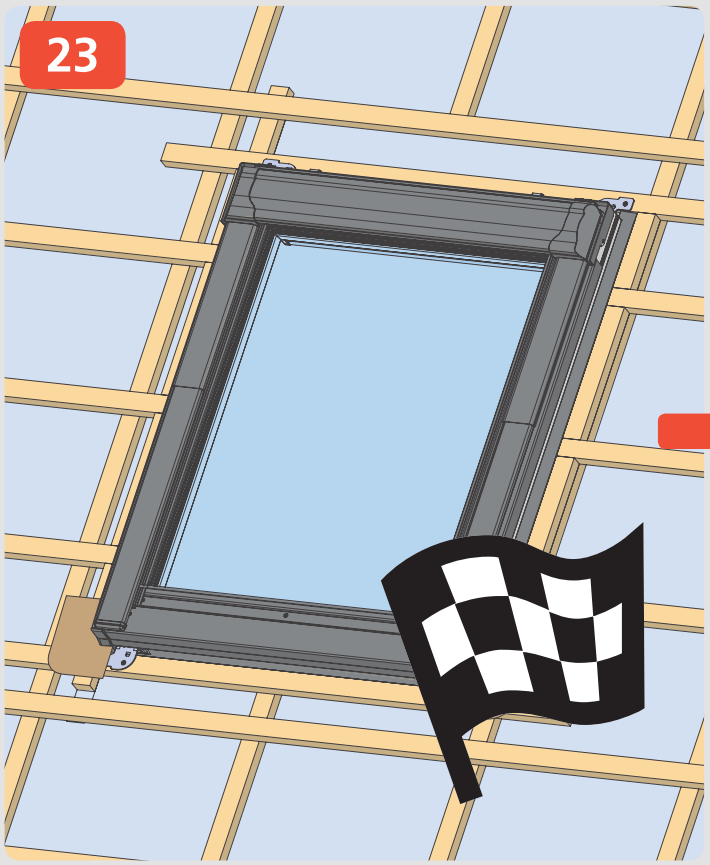
23

TRF
000mm x 000mm
DTRF
000mm x 000mm
SRF
000mm x 000mm
PTRF
000mm x 000mm
keylite
PTRF
keylite
SRF
keylite
TRF