Iss	Date	DESCRIPTION	By

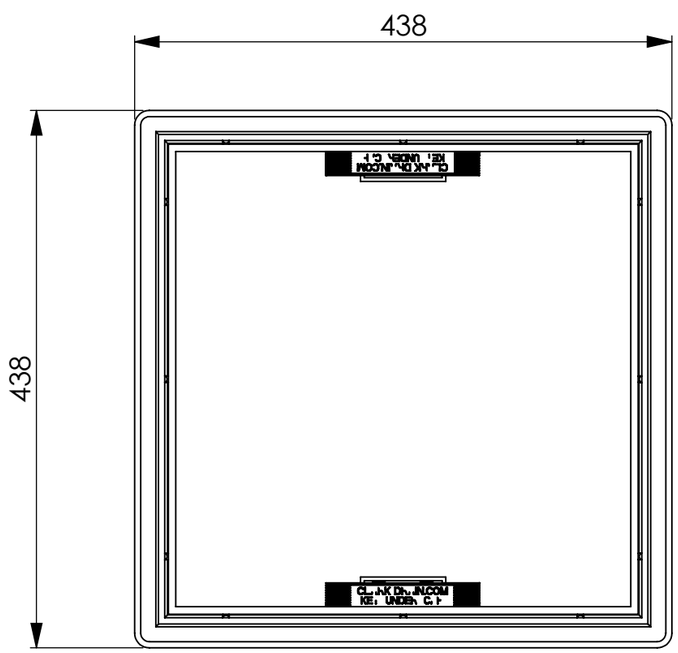

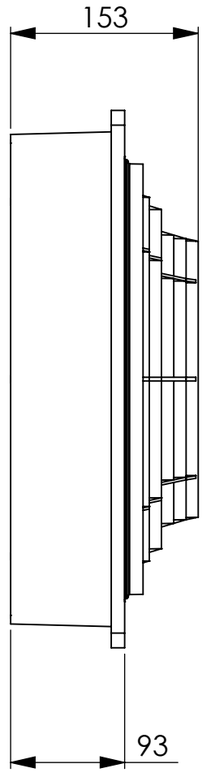

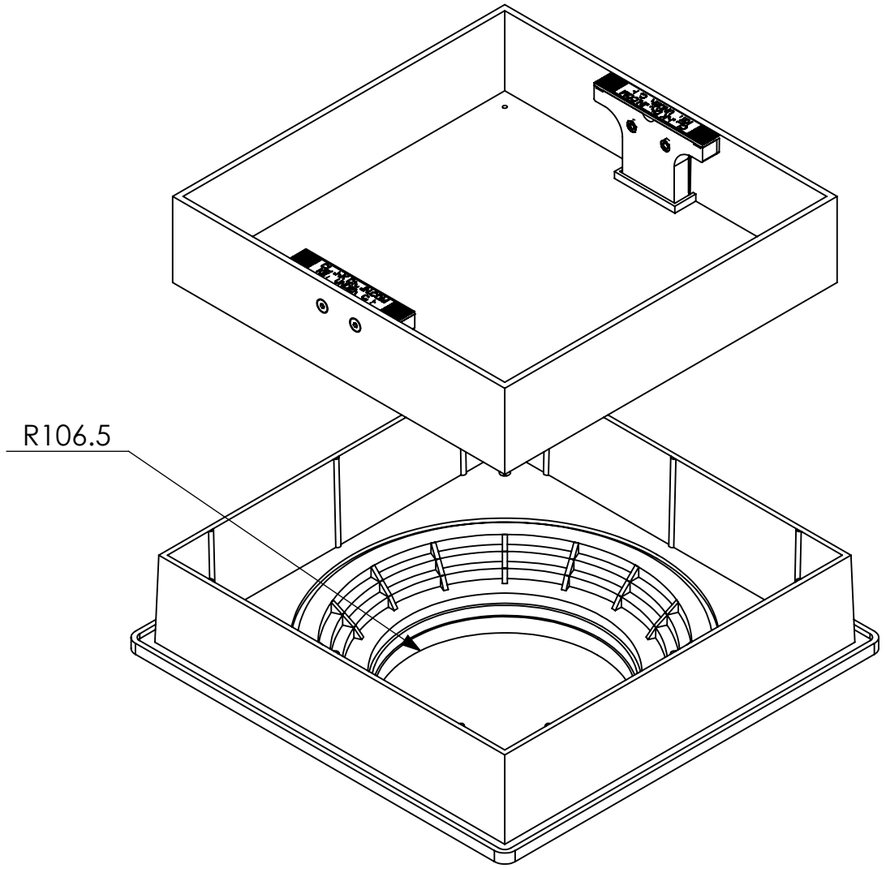

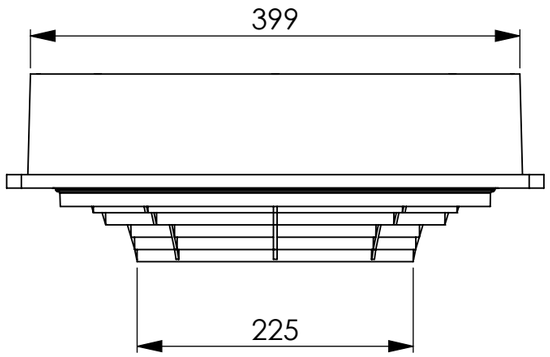

CLARK-DRAIN
THE DRAINAGE COMPANY
STATION ROAD, YAXLEY, PETERBOROUGH PE7 3EQ
PHONE 01733 765369 FAX 01733 246911

DIMENSIONS IN MILLIMETRES
PROJECTION
TOLERANCE UNLESS OTHERWISE SPECIFIED:
CASTINGS ±1mm
MACHINED DIM'NS ±0.4mm

DRN. R.P.HARDS
DATE 24/06/2010
SCALE 1:5

MATERIAL - ERROR!:Material
FINISH - NATURAL
WEIGHT 4 kg

TOLERANCES UNLESS OTHERWISE STATED.
**DIMENSIONS IN SAME MOULD HALF-:
UP TO 25mm ~ +/-1mm
UP TO 200mm ~ +/-1.5mm
UP TO 600mm ~ +/-2mm
OVER 600mm ~ +/-3mm
DIMENSIONS AT 90° TO SPLIT LINE-:
UP TO 50mm ~ +2/-0mm
UP TO 150mm ~ +3/-0mm

COVER TO FRAME CLEARANCE PER SIDE FOR SINGLE COVERS AND DOUBLE TRIANGLE COVERS-:
1mm MINIMUM TO 2.5mm MAXIMUM.
COVER TO FRAME CLEARANCE FOR MULTIPLE COVERS-:
COVER TO FRAME CLEARANCE ~ 1mm TO 2.5mm WITH 1mm TO 2mm BETWEEN EACH COVER OR PAIR OF COVERS.
ALL CLEAR OPENINGS ~ +4/-0
NOTE - DIMENSIONS IN **STARRED GROUP MUST NOT BE ALLOWED TO AFFECT COVER/FRAME CLEARANCES ABOVE

Copyright is reserved on this drawing and its contents must not be made available to third parties without prior consent of: CLARK-DRAIN LTD.
Any article shown on this drawing is also protected by Design Right and should not be copied.

READ ALL NOTES
DO NOT SCALE
IF IN DOUBT, ASK

TITLE CD 300 SR RECESSED ASSEMBLY

SHEET 2of 2
CLKS N/A
A3