TECHNICAL DATA SHEET

Product Code:

560083

Description:

Victoria-N Unik Pack (2 Drawer) (1000mm)

Specification:

Size: L 1000mm, W 460mm, H 565mm

Material: Vitreous China / Particle Board / Melamine

Finish: White (Basin) / Gloss White (Lacquered) (Unit)

Installation Type: Wall-Mounted (screws or adhesive pads)

Product Image:

Technical Drawing:

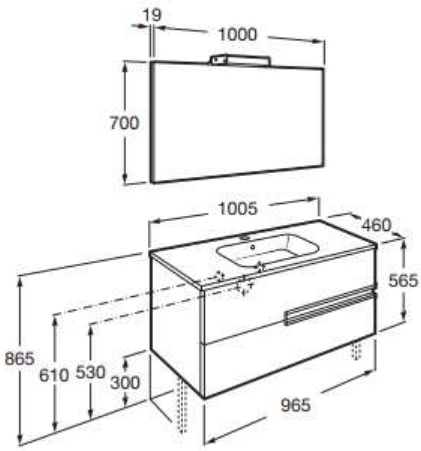

Clean furniture with a soft, clean and damp cloth, warm water and a mild household cleaner (such as diluted washing-up liquid). Any stainless steel parts should be cleaned with a soft, lint-free cloth and non-abrasive stainless steel cleaner. Spray directly on to the cloth and wipe clean.

Ensure the bathroom is well ventilated to ensure the quality and appearance of the furniture is maintained.

Do not use abrasive cleaners or sharp objects when cleaning. Do not leave chemicals such as hair dye, nail varnish remover or perfume on surfaces. Do not overload drawer units as the can damage the drawer runners. Do not leave water on the surface of the furniture, always wipe dry.

Clean regularly with warm soapy water, rinse with cold water, dry and polish with a dry soft cloth. A cream or liquid cleaner can also be used.

Occasional use of a mild bathroom limescale remover is acceptable, if used in conjunction with the manufacturer's instructions.

Use of bleach in the toilet bowl is acceptable. A ceramic rubber can be used to remove metal marks and minor blemishes. Water softeners are recommended for hard water prone areas and should be fitted during installations to prevent from lime scale attack. Do ensure to check these areas regularly.

Do not put bleach products (e.g. bleach blocks or tablets) in the actual cistern as this can cause damage and will invalidate the warranty. Do not leave bleach or strong cleaners in the product to stand overnight and do not mix different cleaners in the WC as they can cause a chemical reaction and potentially give off poisonous gasses.

'The information contained within this specification sheet is believed to be correct and complete at the time of creation. All photographs / drawings are as a guide only and do not necessarily represent the products available. Travis Perkins PLC reserves the right to change product details and price without prior notice. E&OE.'