FIXED GAP INSTALLATION

FLOOR MOUNTED – For use when fitting to posts

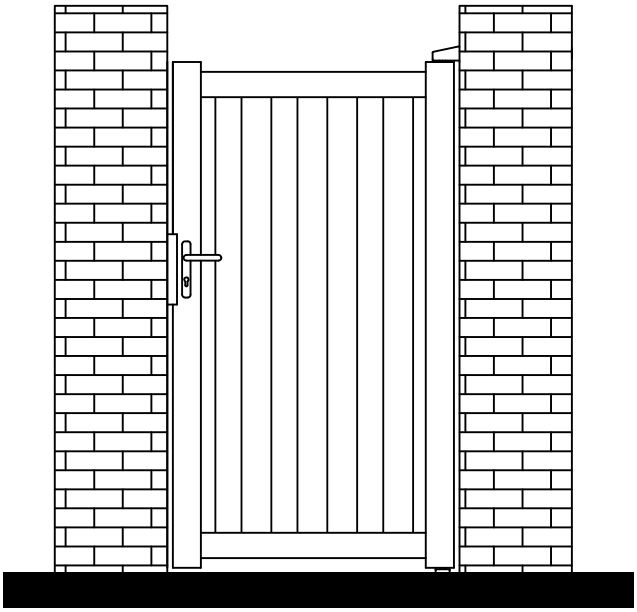

RMG001PG

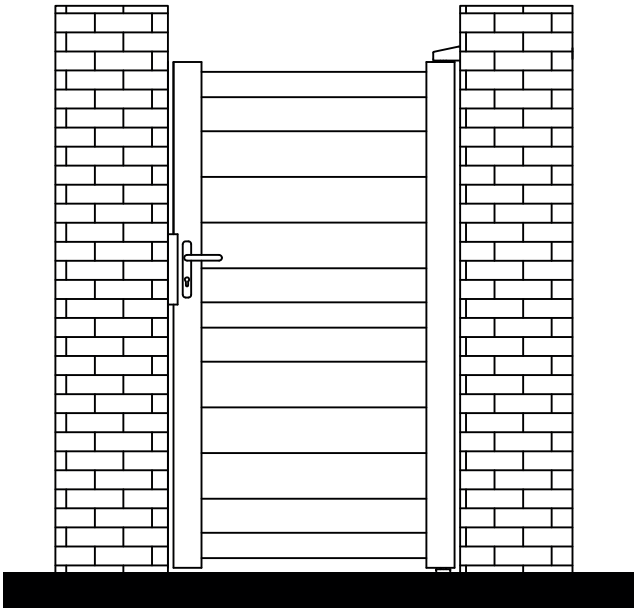

RMG002PG

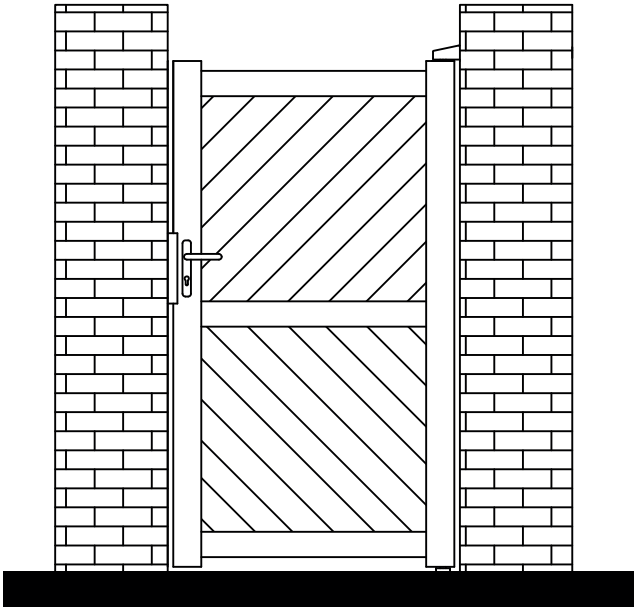

RMG003PG

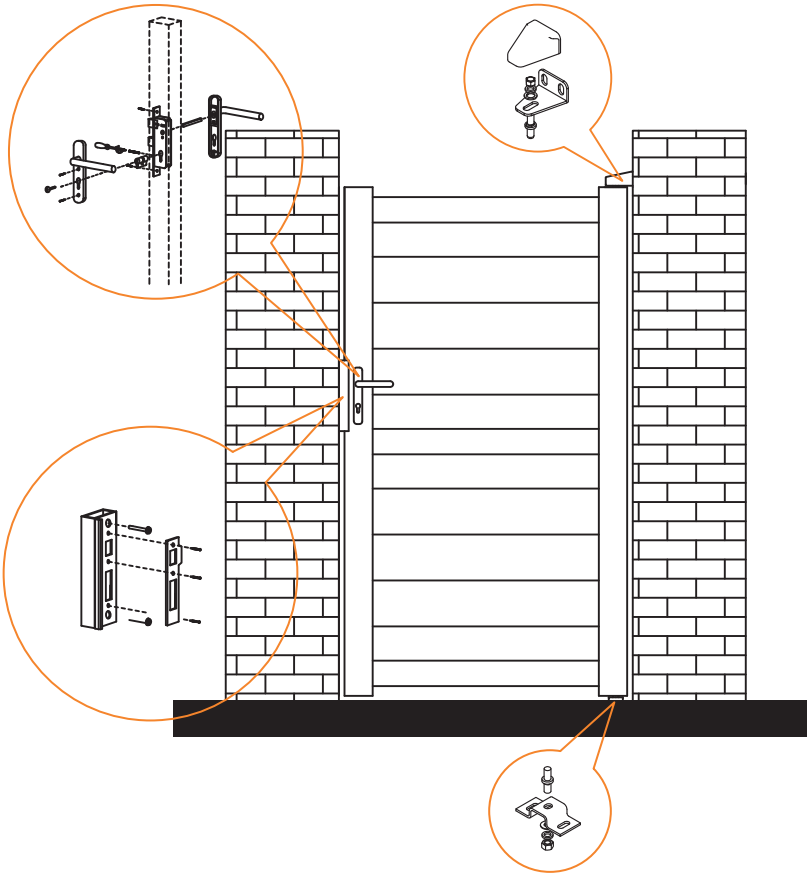

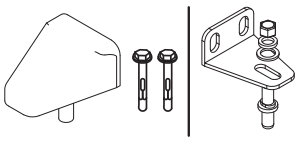

1x Wall Mounted Hinge
(Top)

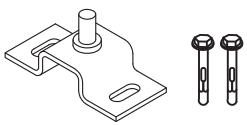

1x Floor Mounted Hinge
(Bottom)

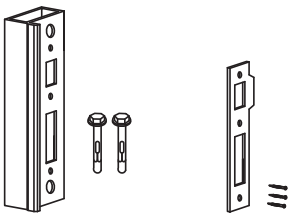

Lock Keep

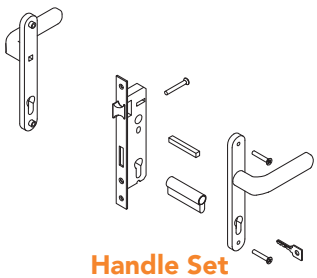

Handle Set

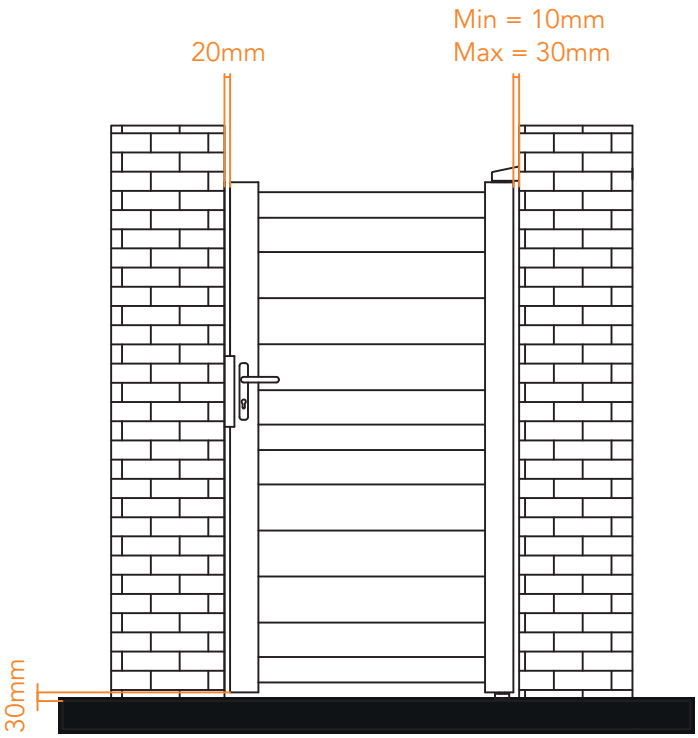
20mm
Min = 10mm
Max = 30mm
30mm

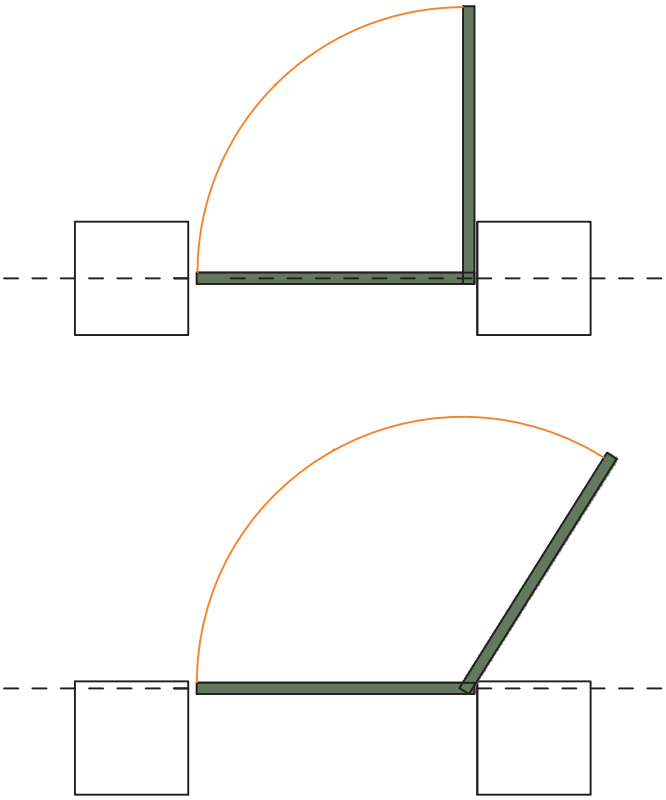

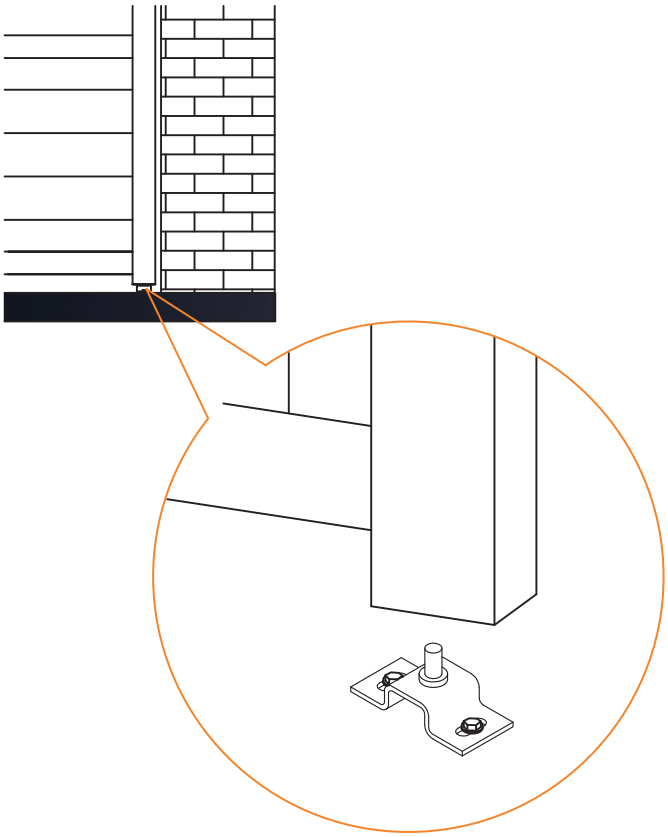

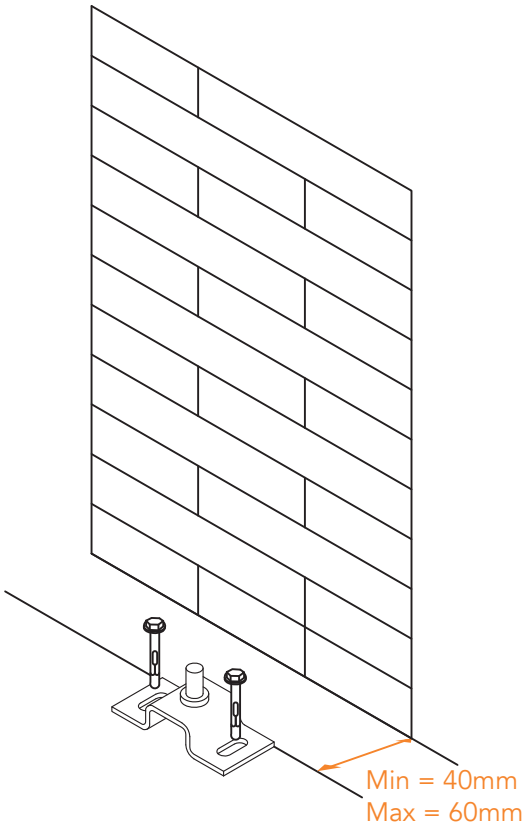
Min = 40mm
Max = 60mm

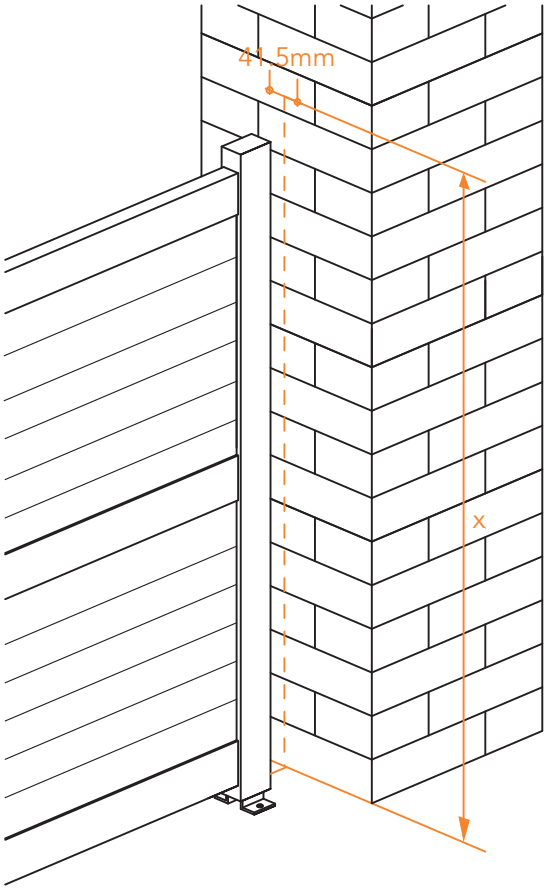
41.5mm
x

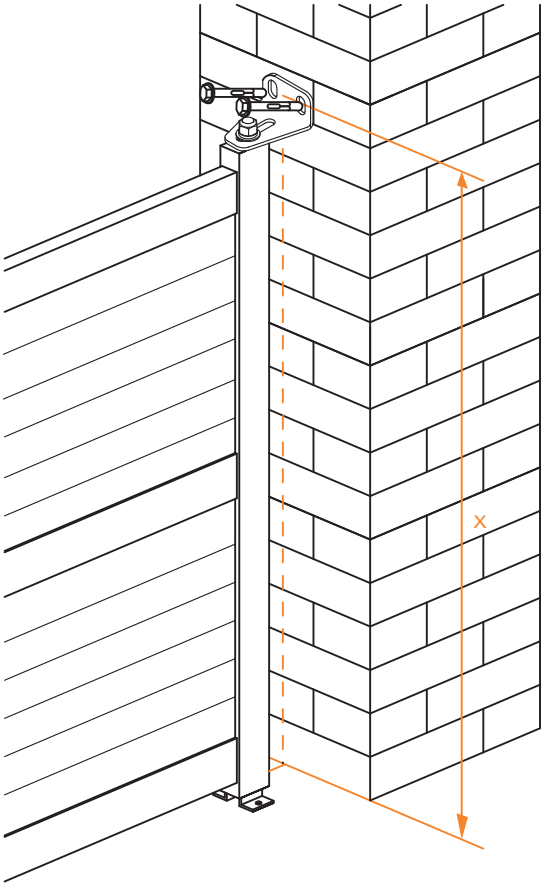
x

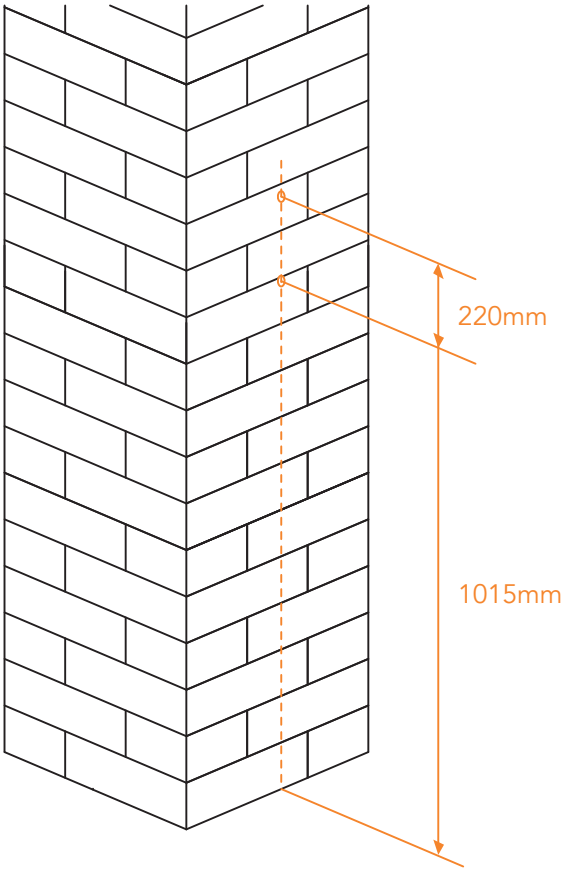
220mm
1015mm

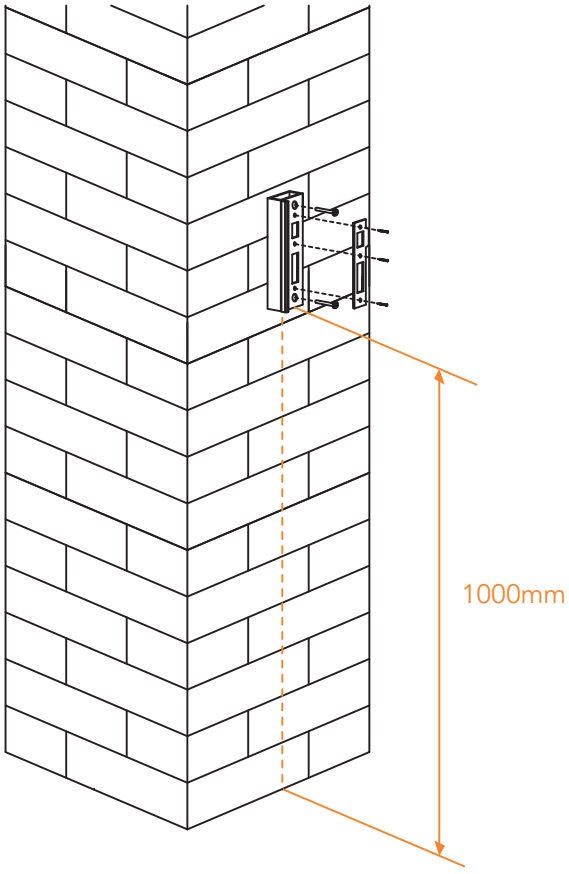
1000mm