TRITON

T80Z
electric shower

Installation and operating instructions

INSTALLERS PLEASE NOTE THESE INSTRUCTIONS ARE TO BE LEFT WITH THE USER

2180700P - April 2012

SHOWER CONTROLS - quick user guide

To START or STOP your shower.

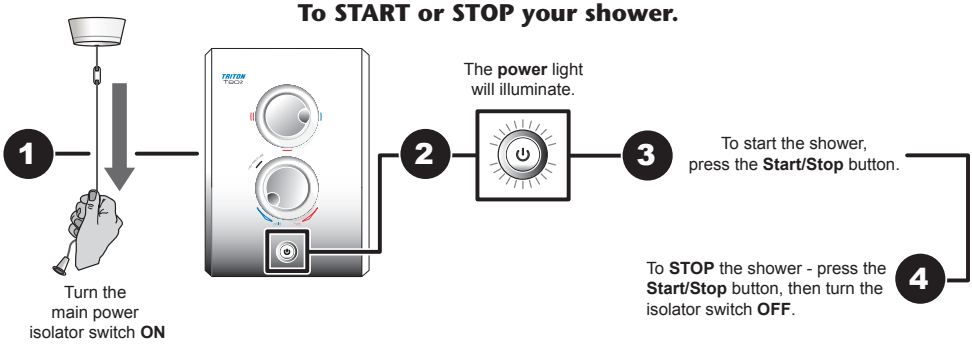

To alter the Power and Temperature of your shower.

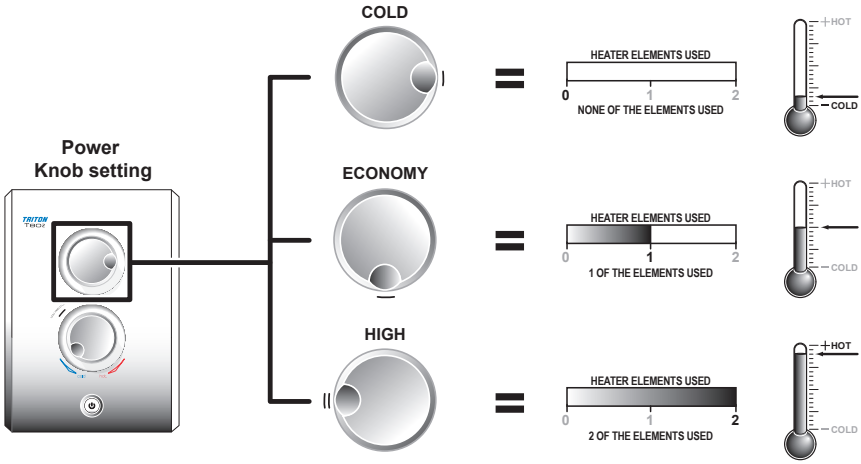

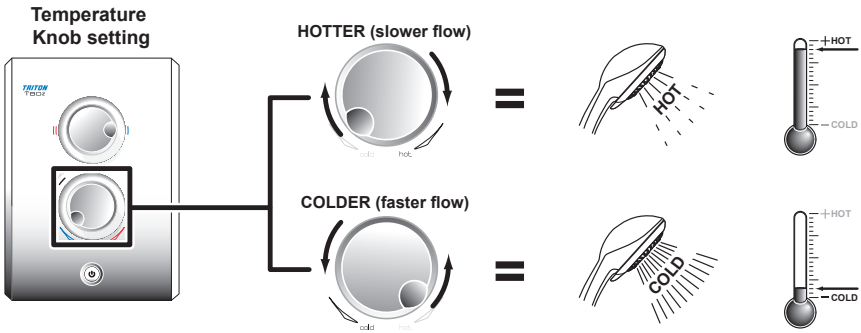

CONTENTS Page

SHOWER CONTROLS - quick user guide ..... **Inside cover**

IMPORTANT SAFETY INFORMATION *(please read)* **2**

Dimensions and entry points 3

Introduction 4
Specifications..... 4
Important advice to users 4

Electrical requirements..... 5 - 6

Water requirements 7

User Operating Instructions..... 8 - 10

INSTALLING THE SHOWER..... 11 - 13

Siting of the shower..... 11

Fitting the shower to the wall ..... 12 - 13

Plumbing connections 14

Electrical connections 15

COMMISSIONING..... 16 - 19

Fitting The Cover - valve & knob positions..... 16 - 17

Commissioning procedure 18

Cleaning the filter - installers & service engineers only 19

Spare parts ..... 20 - 21

Fault finding/Troubleshooting..... 22 - 23

UK Guarantee/Service Policy ..... rear cover

To check the product suitability for commercial and multiple installations, please contact Triton's specification advisory service before installation.

Telephone: 0844 980 0730
Facsimile: 0844 980 0744
E mail: technical@tritonshowers.co.uk

PLEASE READ THIS IMPORTANT SAFETY INFORMATION

Products manufactured by Triton are safe and without risk provided they are installed, used and maintained in good working order in accordance with our instructions and recommendations.

⚠ **WARNING: DO NOT** operate shower if frozen, or suspected of being frozen. It must thaw out before using.

⚠ **DO NOT** operate the unit if the showerhead or spray hose becomes damaged.

⚠ **DO NOT** restrict flow out of shower by placing showerhead in direct contact with your body.

⚠ **DO NOT** operate the shower if water ceases to flow during use or if water has entered inside the unit because of an incorrectly fitted cover.

⚠ **WARNING: If restarting the shower immediately after stopping, be aware that a slug of hot water will be expelled for the first few seconds.**

1 GENERAL

1.1 Isolate the electrical and water supplies before removing the cover.

1.2 Read all of these instructions and retain them for later use.

1.3 **DO NOT** take risks with plumbing or electrical equipment.

1.4 Isolate electrical and water supplies before proceeding with the installation.

1.5 The unit must be mounted onto the finished wall surface (on top of the tiles). **DO NOT** tile up to or seal around **ANY PART** of the unit using silicone sealer after fixing to the wall. Special care must be taken **NOT TO BLOCK OR SEAL ANY PRD VENTS ON THE UNIT**.

1.6 Contact Customer Service *(see back page)*, if any of the following occur:

a) *If it is intended to operate the shower at pressures above the maximum or below the minimum stated.*

b) *If the unit shows a distinct change in performance.*

c) *If the shower is frozen.*

1.7 If it is intended to operate the shower in areas of hard water (above 200 ppm temporary hardness), a scale inhibitor may have to be fitted. For advice on the Scale Inhibitor, contact Customer Service.

1.8 The showerhead must be cleaned regularly with descalent to remove scale and debris, otherwise restrictions to the flow on the outlet of the unit will result in higher temperatures and could also cause the (PRD) Pressure Relief Device in the unit to operate.

1.9 This product is not suitable for mounting into steam rooms or steam cubicles.

2 PLUMBING

2.1 The plumbing installation must comply with Water Regulations, Building Regulations or any particular regulations as specified by Local Water Company or Water Undertakers and should be in accordance with BS 6700.

2.2 The supply pipe must be flushed to clear debris before connecting to the shower unit.

2.3 **DO NOT** solder pipes or fittings within 300mm of the shower unit, as heat can transfer along the pipework and damage components.

2.4 **DO NOT** fit any form of outlet flow control as the outlet acts as a vent for the heater can.

2.5 **DO NOT** use excessive force when making connections to the flexible hose or showerhead, finger tight is sufficient.

2.6 All plumbing connections must be completed before making the electrical connections.

3 ELECTRICAL

3.1 The installation must comply with BS 7671 'Requirements for electrical installations' (IEE wiring regulations), building regulations or any particular regulations as specified by the local Electrical Supply Company.

3.2 This appliance **MUST** be earthed.

3.3 In accordance with 'The Plugs and Sockets etc. (Safety) Regulations 1994', this appliance is intended to be permanently connected to the fixed wiring of the electrical mains system.

3.4 Make sure all electrical connections are tight to prevent overheating.

3.5 A 30mA residual current device (RCD) **MUST** be installed in all UK electric and pumped shower circuits. This may be part of the consumer unit or a separate unit.

3.6 Switch off immediately at isolating switch if water ceases to flow during use.

3.7 Other electrical equipment i.e. extractor fans, pumps must not be connected to the circuits within the unit.

3.8 Switch off at isolating switch when not in use. This is a safety procedure recommended with all electrical appliances.

3.9 As with all electrical appliances it is recommended to have the shower and installation checked at least every two years by a competent electrician to ensure there is no deterioration due to age and usage.

Fig.1

DIMENSIONS

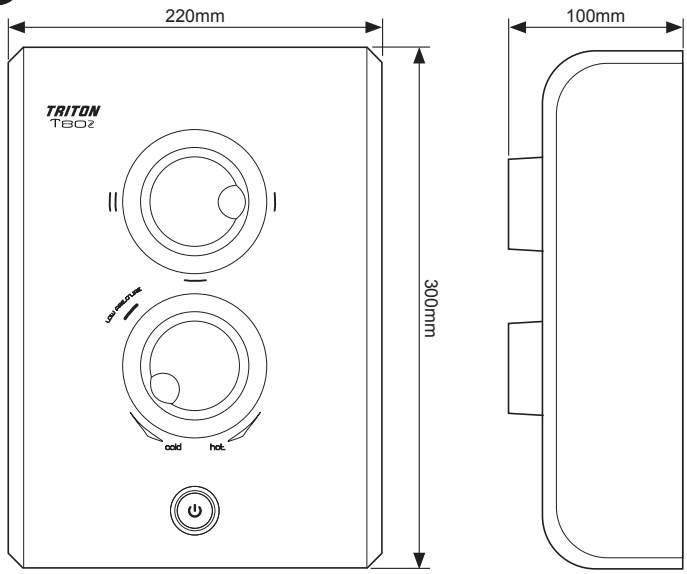

ENTRY POINTS

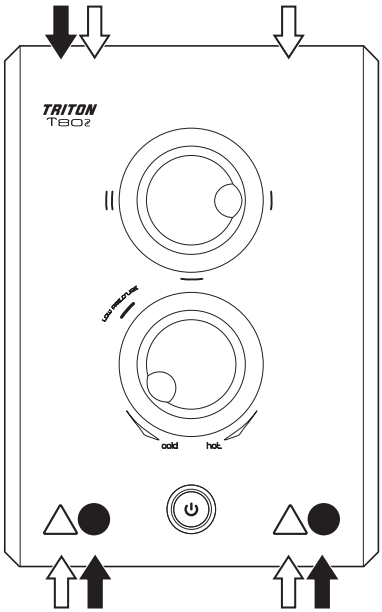

WATER ● = Back ➡ = Others

Left: Bottom, Back & Top.

Right: Bottom & Back.

CABLE △ = Back ⇨ = Others

Left: Bottom, Back & Top.

****Right:*** Bottom, Back & Top.
*(*Z uni-fit kit required.)*

Inlet connection: 15mm diameter.

Outlet connection: ½" BSP male thread.

Fig.2

INTRODUCTION

This book contains all the necessary fitting and operating instructions for your electric shower. Please read them carefully.

The shower installation must be carried out by a suitably qualified person and in the sequence of this instruction book.

Care taken during the installation will provide a long, trouble-free life from your shower.

SPECIFICATIONS

Electrical

Nominal power rating at 240V	Nominal power rating at 230V
7.5kW – (32A MCB rating)	6.9kW – (32A MCB rating)
8.5kW – (40A MCB rating)	7.8kW – (40A MCB rating)
9.5kW – (40A MCB rating)	8.7kW – (40A MCB rating)
10.5kW – (45A MCB rating)	9.6kW – (45A MCB rating)

Materials

Backplate, cover, controls, showerhead – ABS.
Sprayplate – Acetal.
Elements – Minerally insulated corrosion resistant metal sheathing.

Standards and Approvals

Splashproof rating IPX4.

Complies with the requirements of current British and European safety standards for household and similar electrical appliances.

Meets with Compliance with European Community Directives (CE).

ADVICE TO USERS

IMPORTANT: When first installed the unit will be empty. It is essential the unit should contain water before the elements are switched on. It is vital that the commissioning procedure is followed. Failure to carry out this operation will result in damage to the unit and will invalidate the guarantee.

The following points will help you understand how the shower operates:

a. The electric heating elements operate at a constant rate at your chosen power setting. It is the rate of the water passing through the heater can which determines the water temperature. (The slower the flow, the hotter the water becomes; the faster the flow, the cooler the water.)

b. During winter the mains water supply will be cooler than in the summer, so the flow rate will vary between seasons at any one temperature setting. At different times of the year you may have to adjust the position of the temperature control to maintain your desired temperature setting.

c. The stabiliser valve minimises variations in shower temperature during mains water pressure changes. If changes in shower temperature are experienced during normal use, it will most likely be caused by the water pressure falling near to or below the minimum level. The drop in pressure may be due to water being drawn off at other points in the house while the shower is in use. If pressure drops appreciably below the minimum, the heating elements will automatically cut out.

If ever the water becomes too hot and you cannot obtain cooler water, first check that the sprayplate in the showerhead has not become blocked.

DO NOT place items such as soap or shampoo bottles on top of the unit. Liquid could seep through the joint between the cover and backplate, and possibly damage the sealing rubber.

Replacement parts can be ordered from Triton Customer Service. See *'spare parts'* for details and part numbers.

ELECTRICAL REQUIREMENTS

WARNING!
THIS APPLIANCE MUST BE EARTHED

The installation, supply cable and circuit protection must conform with **BS 7671** (IEE wiring regulations) and be sufficient for the amperage required.
The following notes are for guidance only:

1 The shower must only be connected to a 230-240V ac supply. If you are installing a shower with a kilowatt rating above 9kW, it is advisable to contact the local electricity supply company.

1.1 The electrical rating of the shower is shown on the rating label **(Fig.3)** within the unit.

2 Before making any sort of electrical connection within the installation make sure that no terminal is live. If in any doubt, switch off the whole installation at the mains supply and remove the correct fuse.

3 The shower must be connected to its own independent electrical circuit. **IT MUST NOT** be connected to a ring main, spur, socket outlet, lighting circuit or cooker circuit.

3.1 The electrical supply must be adequate for the loading of the unit and existing circuits.

4 Check your consumer unit (main fuse box) has a main switch rating of 80A or above and that it has a spare fuse way which will take the fuse or Miniature Circuit Breaker (MCB) necessary for the shower **(Fig.4).**

4.1 If your consumer unit has a rating below 80A or if there is no spare fuse way, then the installation will not be straightforward and may require a new consumer unit serving the house or just the shower.

4.2 You will need to contact the local electricity company. They will check the supply and carry out what is necessary.

5 For close circuit protection **DO NOT** use a rewireable fuse. Instead use a suitably rated Miniature Circuit Breaker (MCB) or cartridge fuse **(see Table A).**

5.1 A 30mA residual current device (RCD) must be installed in all UK electric and pumped shower circuits. This may be part of the consumer unit or a separate unit.

Fig.3

Fig.4 Schematic of installation circuit

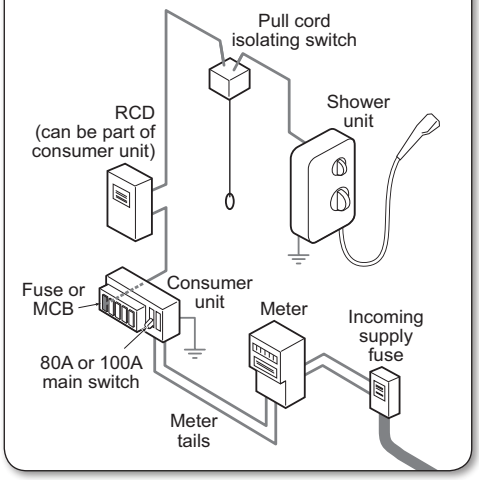

6 A 45 amp double pole isolating switch with a minimum contact gap of 3 mm in both poles must be incorporated in the circuit.

6.1 It must have a mechanical indicator showing when the switch is in the **OFF** position, and the wiring must be connected to the switch without the use of a plug or socket outlet.

6.2 The switch must be accessible and clearly identifiable, but out of reach of a person using a fixed bath or shower, except for the cord of a cord operated switch, and should be placed so that it is not possible to touch the switch body while standing in a bath or shower cubicle. It should be readily accessible to switch off after using the shower.

7 Where shower cubicles are located in any rooms other than bathrooms, all socket outlets in those rooms must be protected by a 30mA RCD.

8 The current carrying capacity of the cable must be at least that of the shower circuit protection **(see Table B).**

8.1 To obtain full advantage of the power provided by the shower, use the shortest cable route possible from the consumer unit to the shower.

8.2 It is also necessary to satisfy the disconnection time and thermal constraints which means that for any given combination of current demand, voltage drop and cable size, there is a maximum permissible circuit length.

9 The shower circuit should be separated from other circuits by at least twice the diameter of the cable or conduit.

9.1 The current rating will be reduced if the cabling is bunched with others, surrounded by thermal loft or wall insulation or placed in areas where the ambient temperature is above 30°C. Under these conditions, derating factors apply and it is necessary to select a larger cable size.

Table A

Circuit Protection

unit rating	MCB	cartridge fuse
7.0kW	30/32A	30A
7.5kW	32A	35A
8.0kW	40A	35A
8.5kW	40A	45A
9.0kW	40A	45A
9.5kW	40/45A	45A
10.5kW	45A	45A

Table B

Twin and earth PVC insulated cable Current carrying capacity

Installed in an insulated wall	In conduit trunking	Clipped direct or buried in a non-insulated wall
6 mm² 35A	6 mm² 38A	6 mm² 47A
10 mm² 47A	10 mm² 52A	10 mm² 64A
16 mm² 63A	16 mm² 69A	16 mm² 85A

Note: Cable selection is dependent on derating factors

9.2 In the majority of installations, the cable will unavoidably be placed in one or more of the above conditions. This being so, it is strongly recommended to use a minimum of 10mm cabling throughout the shower installation.

9.3 In any event, it is essential that individual site conditions are assessed by a competent electrician in order to determine the correct cable size and permissible circuit length.

WATER REQUIREMENTS

The installation must be in accordance with Water Regulations/Bylaws.

Supply Source	Mains pressure cold water
*Minimum running pressure and flow to the inlet of the shower for full performance	100kPa (1.0 bar) at 8 litres per minute for **7.5Kw - 8.5Kw - 9.5Kw (ECO)**
*Minimum running pressure and flow to the inlet of the shower for full performance	150kPa (1.5 bar) at 11 litres per minute for **10.5Kw**
Maximum static pressure	1000 kPa (10 bar)
Maximum inlet temperature	28°C
Minimum inlet temperature	2°C

* **Note:** the shower will continue to operate on a reduced heat setting if the running pressure falls to **0.7 bar (1.2 bar for 10.5kW)**, there will be a noticeable reduction in flow and temperature from the showerhead.

If the stated flow rates are not available, it may not be possible to achieve optimum performance from the unit throughout the year.

During periods of high ambient temperatures it may be necessary to select the economy power setting to achieve your preferred shower temperature.

Note: The T80z Eco flow rate is limited to 6 litres per minute, during the warmer months it may be necessary to select the economy power setting.

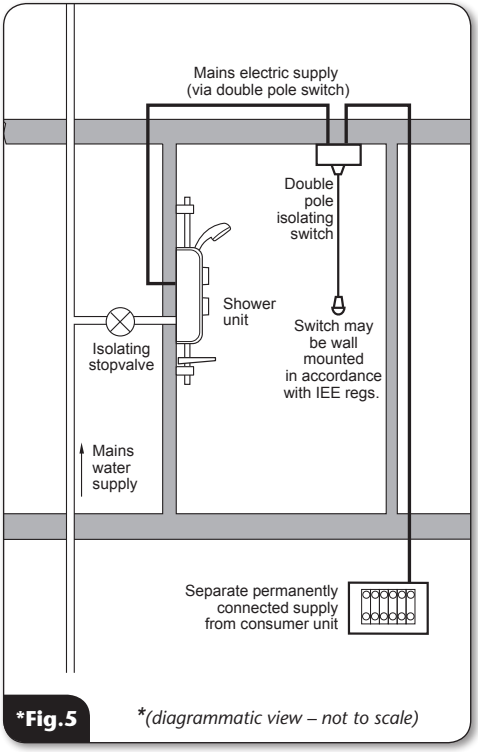

***Fig.5** **(diagrammatic view – not to scale)*

Fig.5 shows a typical system layout.

Do not use jointing compounds on any pipe fittings for the installation.

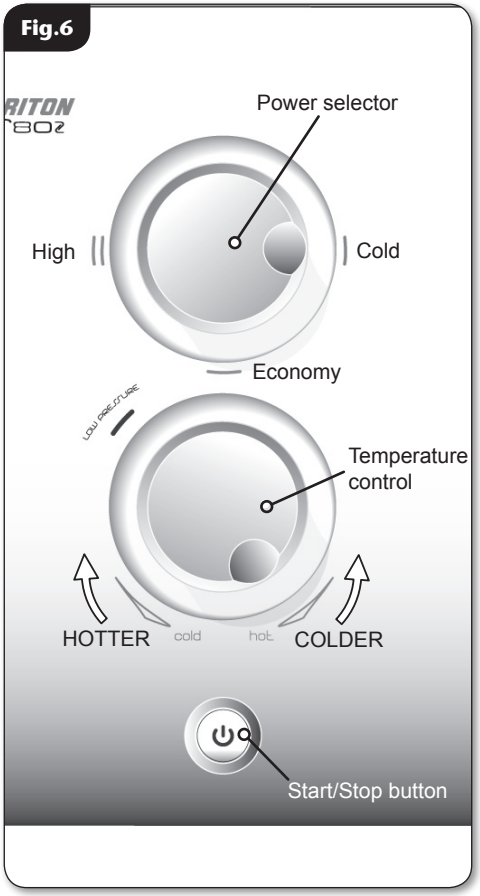

Note: In normal use, it is in order to leave the water supply permanently on to the shower unit, but as with most electrical appliances, **the unit must be switched off at the isolating switch when not in use.**

OPERATING THE SHOWER - (fig.6)

Make sure the commissioning procedure has been carried out.

To start the shower

- Press the Start/Stop button and water will flow.

To stop the shower

- Press the Start/Stop button and water will cease to flow.
- After stopping the unit **MUST** be isolated via the 45amp-isolating switch.

NOTE: ***If restarting immediately after stopping be aware that a slug of hot water will be expelled for the first few seconds.***

To use the power selector

The power selector has three positions - **COLD, ECONOMY** and **HIGH**.

Cold setting - single blue line.

- **Cold:** the cold setting does not provide any heat from the heater can to the incoming water.

Economy setting - single red line.

- **Economy:** uses only one of the elements within the heater can.

NOTE: ***If the stated flow rate required for the unit cannot be met due to low water pressure, it will be necessary to operate the unit on this setting during the warmer months because of flow rate limitations entering the unit.***

High Setting - double red lines.

- **High:** uses both of the elements within the heater can.

IMPORTANT: ***it will take a few seconds for the temperature to stabilise once changes have been made.***

To adjust the shower temperature - Economy and High settings only

- The water temperature is altered by increasing or decreasing the flow rate of the water through the shower via the temperature control **(fig.6).**
- After obtaining your showering temperature, the knob can be left as the normal setting and should only need altering to compensate for seasonal changes in ambient water temperature.

NOTE: *The preferred knob position on ECONOMY will give a different temperature to the same position on HIGH.*

To decrease the shower temperature

- Turn the temperature control **anti-clockwise** - this will increase the flow of water through the shower and make the water **colder**.

To increase the shower temperature

- Turn the temperature control **clockwise** - this will decrease the flow of water through the shower and make the water **hotter**.

NOTE: *It is advisable that the showering temperature is satisfactory by testing with your hand before stepping under the showerhead. There will always be a time delay of a few seconds between selecting a flow rate and the water reaching the stable temperature for that flow rate.*

WARNING

This appliance is not intended for use by persons (including children) with reduced physical, sensory or mental capabilities, or lack of experience and knowledge, unless they have been given supervision or instruction concerning use of the appliance by a person responsible for their safety.

Children should be supervised to ensure that they do not play with the appliance.

IMPORTANT - CLEANING

It is recommended that all products are cleaned using warm, soapy water.

DO NOT use abrasive or aggressive chemical cleaning products as this may affect the product surface finish and invalidate your guarantee.

OPERATING FUNCTIONS

Power on indicator (fig.7)

When the electricity supply to the shower is switched on at the isolating switch, the neon in the START/STOP button will illuminate.

TP – Temperature Protection

During normal operation if the temperature exceeds the showering safety limit the power to the elements will be removed completely, although water will continue to flow. When the temperature has cooled sufficiently, power to the elements will be automatically restored to the settings at the time of interruption.

Abnormal Safety cut-out

The unit is fitted with a non-resettable thermal cut-out safety device. In the event of abnormal operation which could cause unsafe temperatures within the unit, the device will disconnect the heating elements. It will require a visit from a qualified engineer to determine the nature of the fault and replace the safety device, once the unit has been repaired.

Low pressure indicator

If this indicator is red, this means the water pressure has fallen below the minimum required for correct operation of the shower, resulting in the low pressure cut-out operating. This switches off power to the heating elements preventing any undue temperature rises (water will continue to flow). Power will automatically be restored when adequate water pressure returns.

Two Stage Pressure Switch

This unit is fitted with a two stage pressure switch. In normal operation, 1 Bar running inlet pressure is required to enable the shower to operate at full power (1.5 Bar running inlet pressure required for 10.5kW unit). In the event a low pressure condition (down to 0.7 Bar), the shower will continue to operate at a reduced power setting (1.2 Bar required for 10.5kW unit). Below 0.7 bar pressure, all power to the elements will be removed. Power to the elements will be restored once the minimum appropriate inlet pressure is re-established.

SITING OF THE SHOWER

- Refer to **(fig.8)** for the correct siting of the shower. Position the unit where it will **NOT** be in direct contact with water from the showerhead. Position the shower unit vertically.
- Allow enough room between the ceiling and the shower to access the cover top screws.

NOTE: ***Water regulations require the showerhead be constrained by a fixed or sliding attachment so that it can only discharge water at a point not less than 25mm above the spill-over level of the relevant bath, shower tray or other fixed appliance'. The use of the gel hanger/hose guide (if supplied) will in most cases meet this requirement, but if the showerhead can be placed within a bath, basin or shower tray, then a double check valve, or similar,*** **MUST** ***be fitted in the supply pipework to prevent back-flow.***

Pressure relief safety device

- A pressure relief device (PRD) is designed into the shower unit which complies with European standards. The PRD provides a level of appliance protection should an excessive build up of pressure occur within the shower.

DO NOT ***operate the shower with a damaged or kinked shower hose, or a blocked showerhead. This may cause the PRD to operate.***

- When commissioning, the showerhead must be removed from the flexible hose. Failure to follow this procedure may cause the PRD to operate.
- Make sure the shower is positioned over a bath or shower tray. If the PRD operates, then water will eject from the bottom of the unit. Should this happen, turn off the electricity and water supplies to the shower at the isolating switch and stopvalve. Contact Customer Service for advice on replacing the PRD.

WARNING!

The shower must not be positioned where it will be subjected to freezing conditions.

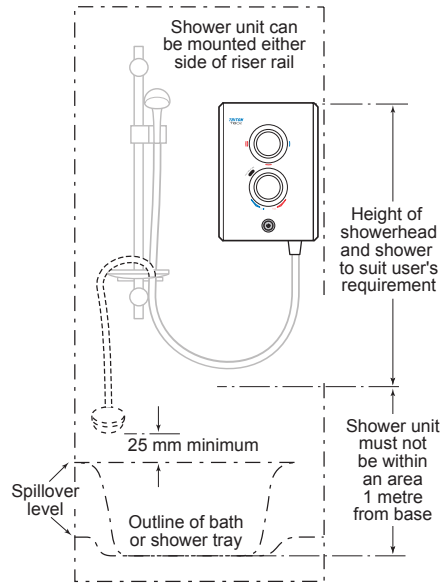

***Fig.8** **(diagrammatic view – not to scale)*

IMPORTANT: ***If installing onto a tiled wall,*** **ALWAYS** ***mount the unit on the surface of the tiles.*** **NEVER** ***tile up to the unit.***

IMPORTANT: ***The unit must be mounted on a flat surface which covers the full width and length of the backplate. It is important that the wall surface is flat otherwise difficulty may be encountered when fitting the cover and subsequent operation of the unit may be impaired.***

Fig.9

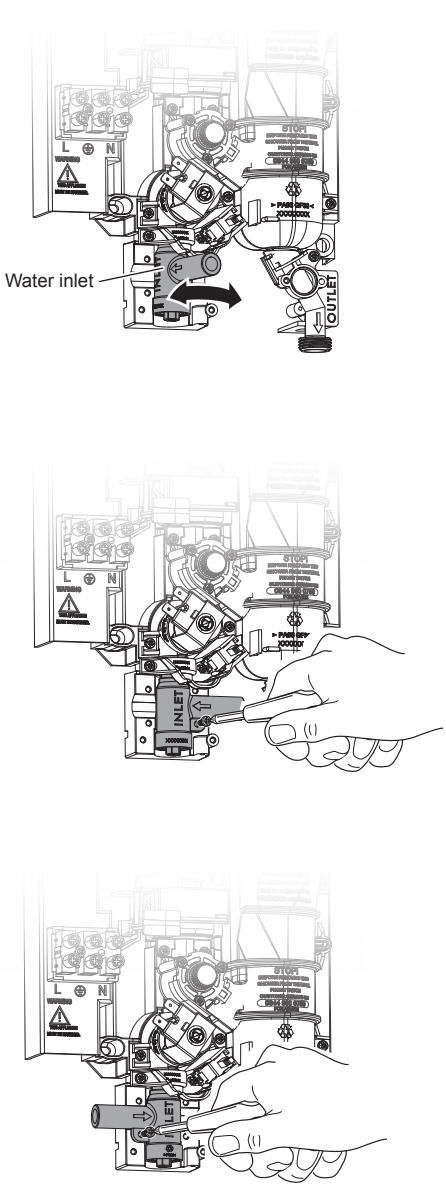

FITTING THE SHOWER TO THE WALL

WARNING!
Check there are no hidden cables or pipes before drilling holes for wall plugs. Use great care when using power tools near water. The use of a residual current device (RCD) is recommended when using power tools.

NOTE: *The control knobs are an integral part of the cover -* **DO NOT** *attempt to remove them.*

- Lift the cover from the backplate.
- Entry positions for the mains water and electric cable can be found on ***page 3***.

The water inlet **(fig.9)** has been designed to allow left or right fitting.

To make the inlet either left or right fitting:

- Turn the inlet either left or right.
- Insert the retaining screw

NOTE: *The Inlet is not fixed during production. Deviations from the designated entry points will invalidate product approvals and could invalidate product warranty.*

- If installing a feed pipe from the rear or bottom, the centre of the inlet valve to the wall surface is 21mm **(fig.10)**.
- After choosing the site for the shower, use the fitting template supplied to mark the two fixing holes.
- The location of the fixing holes in the backplate are shown in **(fig.11)**.
- Drill and plug the wall.
  (An appropriate drill bit should be used.
  If the wall is brick, plasterboard or a soft building block, appropriate wall plugs and screws should be fitted).
- Screw the top fixing screw into position leaving the base of the screw head protruding 6mm out from the wall.
- Hook the backplate over the top screw and fit the bottom fixing screw into position. Do not fully tighten the screws at this stage, as the fixing holes are elongated to allow for out of square adjustment after the plumbing connections have been completed.

NOTE: ***If entry is from the rear, the nut of the compression fitting will be partially behind the surface of the wall* (fig.10)*. This area MUST be left clear when plastering over the pipework in order to make the nut accessible for future adjustments.***

IMPORTANT: ***A suitable sealant should always be used to seal around the incoming pipework to prevent water entering the wall.***

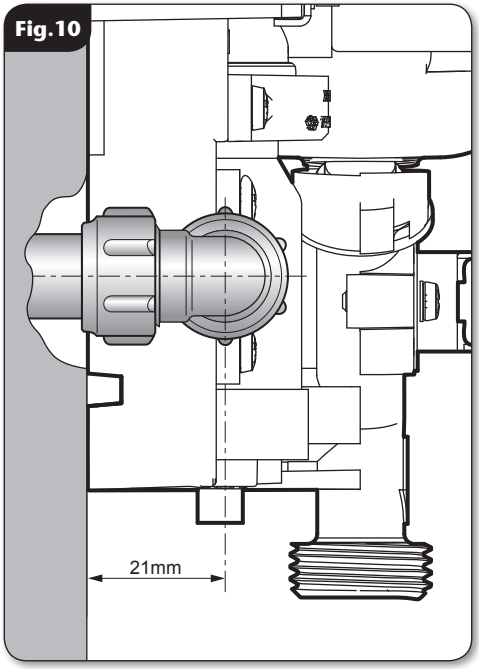

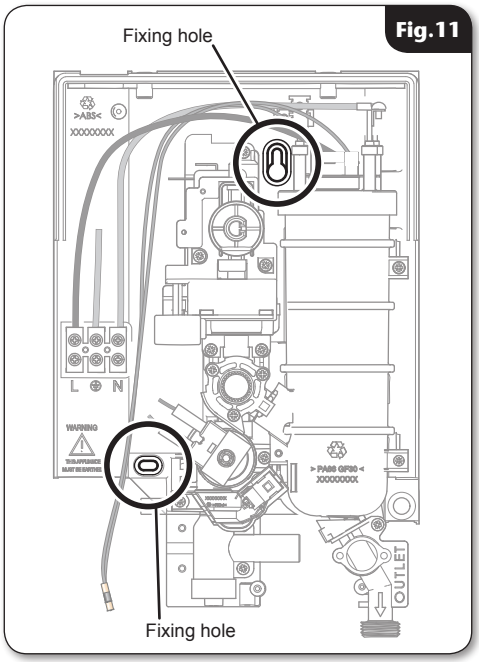

WARNING!

The outlet of the shower acts as a vent and must not be connected to anything other than the hose and showerhead supplied.

PLUMBING CONNECTIONS

Plumbing to be carried out before wiring

- **DO NOT** use jointing compounds on any pipe fittings for the installation.
- **DO NOT** solder fittings near the shower unit as heat can transfer along the pipework and damage components.
- Compression fittings **MUST** be used to connect to the inlet of the shower. (Push-on fittings must **NOT** be used as full engagement cannot be guaranteed).

NOTE: ***An additional stopvalve (complying with Water Regulations) must be fitted in the mains water supply to the shower as an independent means of isolating the water supply should maintenance or servicing be necessary.***

IMPORTANT: ***Before completing the connection of the water supply to the inlet of the shower, flush out the pipework to remove all swarf and system debris. This can be achieved by connecting a hose to the pipework and turning on the mains water supply long enough to clear the debris to waste.***

Procedure

- Turn off water supply either at the mains stopvalve or the isolating stopvalve.
- Connect the mains water supply to the inlet of the shower via 15mm copper, stainless steel or plastic pipe using a 15mm x 15mm compression fitting.
- **DO NOT** use excessive force when making these connections.
- Make sure the backplate is square on the wall and tighten the two retaining screws which hold it to the wall.
- Turn on the mains water supply and check for leaks in the pipework connection to the shower.

NOTE: ***At this stage no water can flow through the unit.***

ELECTRICAL CONNECTIONS

IMPORTANT: *Switch off the electricity supply at the mains before proceeding.*

- **Fig.12** shows a schematic wiring diagram.
- The cable entry points are listed on ***page 3***.
- The cable can be surface clipped, hidden or routed via 20mm conduit.

NOTE: *Conduit entry can only be from rear. Route the cable into the shower unit and connect to the terminal block* **(fig.13)** *as follows:*

Earth cable to terminal marked ⏚
Neutral cable to terminal marked **N**
Live cable to terminal marked **L**

IMPORTANT: *Fully tighten the terminal block screws and make sure that no cable insulation is trapped under the screws. Loose connections can result in cable overheating.*

NOTE: *The supply cable earth conductor must be sleeved. The outer sheath of the supply cable must be stripped back to the minimum.*

- The supply cable **MUST** be secured either by routing through conduit, in trunking, or by embedding in the wall, in accordance with **IEE regulations**.
- The use of connections within the unit or other points in the shower circuit to supply power to other equipment i.e. extractor fans, pumps etc. will invalidate the guarantee.
- **DO NOT switch on the electricity supply until the cover has been fitted.**

NOTE: *The elements on UK models are to 240V specification and will give a lower kW rating if the voltage supply is below 240V.*

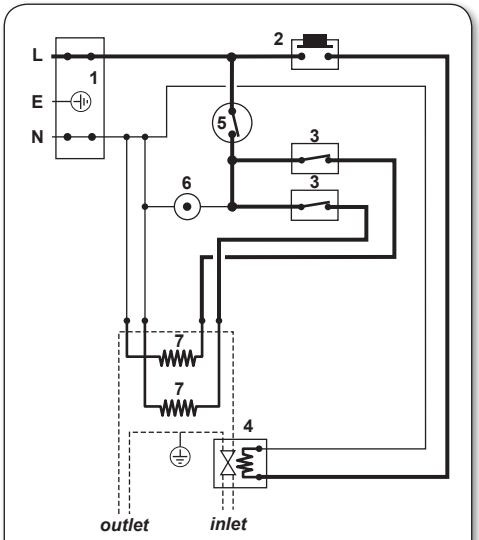

1. Terminal block
2. Start/Stop switch
3. Power selector Microswitch
4. Solenoid valve
5. Thermal cut-out (main)
6. Neon - power
7. Element

Fig.12

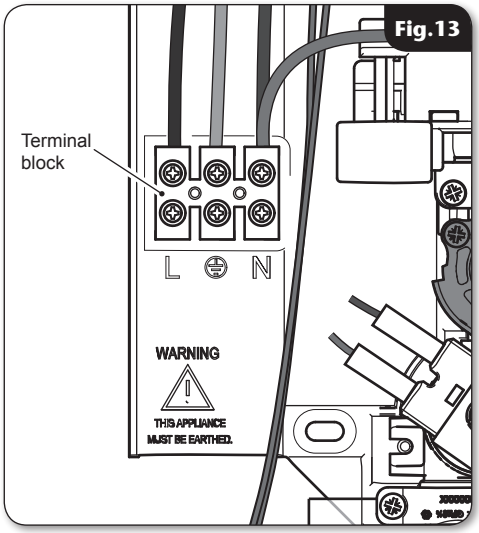

Fig.13

FITTING THE COVER

Figures **14, 15, 16** and **17** show the correct control knob position when replacing the cover.

1. With the cover off the shower - turn the POWER selector spindle clockwise until the flat section is on the left hand side **(fig.14).**

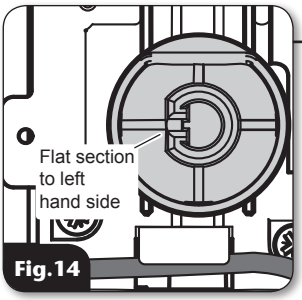

Fig.14

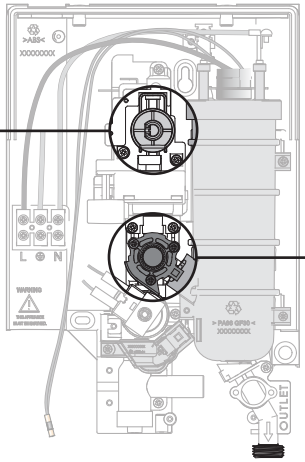

2. With the cover off the shower - turn the stabiliser valve spindle fully clockwise until resistance is felt **(fig.15).**

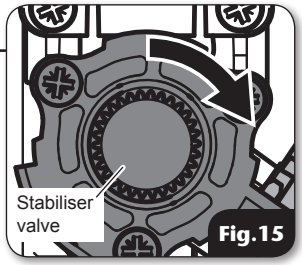

Fig.15

3. With the cover off the shower - turn the power selector to the COLD position **(fig.16).**

Fig.16

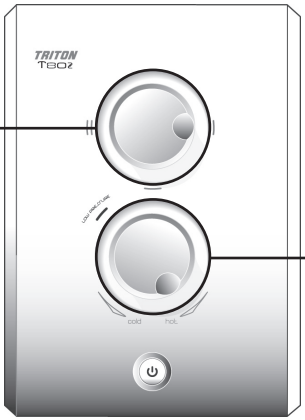

4. With the cover off the shower - turn the temperature control so that it goes to Maximum HOT **(fig.17).**

Fig.17

IMPORTANT: *Before finally fitting the cover, the following steps must be taken:*

a. **Check the plumbing connections are watertight.**

b. **Check the terminal block screws are fully tightened.**

c. **Make sure the pipe and cable entering the unit do not prevent the cover locating correctly to the backplate.**

d. **Check the power selector is in the COLD position - and the temperature control is in the MAXIMUM HOT position.**

- Offer the cover to the unit.
- Plug the neon located on the backplate into the bracket inside the cover **(fig.18)**. The neon clips into the housing on the back of the START/STOP button.
- Make sure that the Low Pressure indicator assembly is in place **(fig.19)**.
- Carefully guide the cover onto the backplate making sure the wires are not trapped.

NOTE: DO NOT *remove the cable tie in this unit.*

- Guide the cover into position so that the knob spindle locates correctly (minor adjustment may be necessary to align the knob and spindle).
- Should any difficulty arise, re check the points above.
- While applying slight pressure to the front cover, secure in place using the three retaining screws.

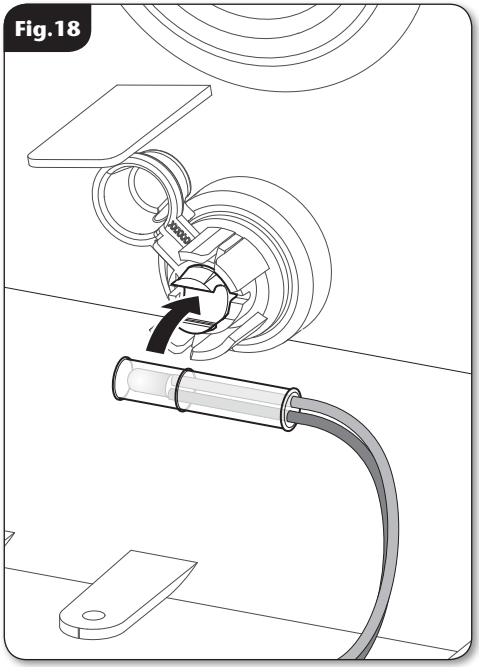

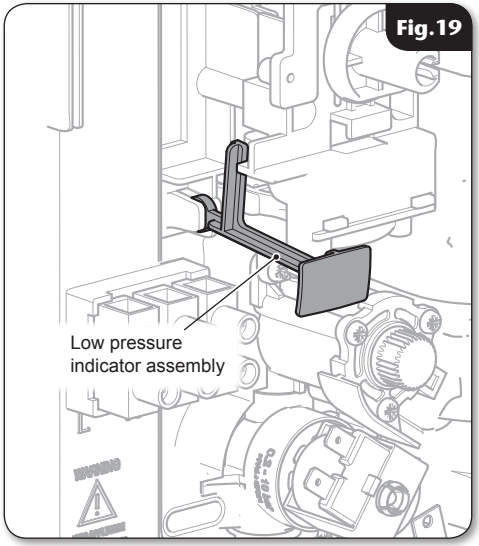

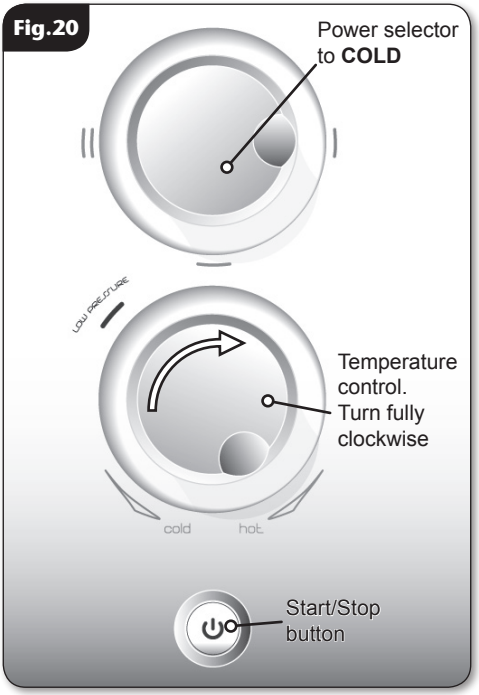

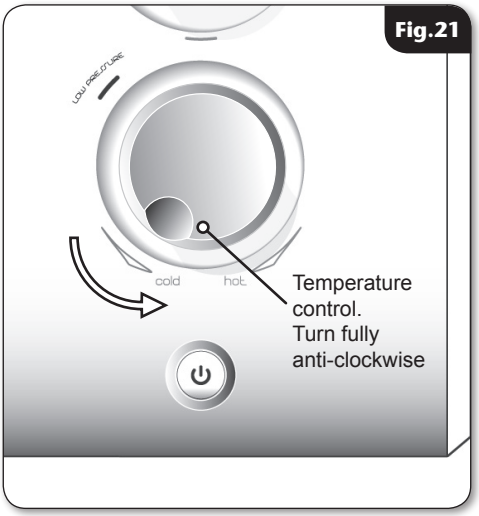

IMPORTANT

Before normal operation of the shower, it is essential the following commissioning procedure is completed correctly.

COMMISSIONING

- The first operation of the shower is intended to flush out any remaining unit debris, and to make sure the heater unit contains water before the elements are switched on.
- This operation must be carried out with the flexible hose screwed to the outlet but **WITHOUT** the showerhead attached, and the outlet from the flexible hose should be directed to waste.
- **IMPORTANT: BEFORE switching on the electric and mains water supplies to the shower** - check that the power selector is in the **COLD** position and the temperature control is turned fully clockwise **(fig.20)**.

NOTE: *Failure to follow the instructions above, may cause the PRD to operate if the Start/Stop button is in the 'START' position when the isolator is switched on.*

- Turn on the electric and mains water supplies to the shower.
- Press the **Start/Stop** button **(fig.20)** and wait until water starts to flow from the flexible hose.
- Slowly turn the temperature control **fully anti-clockwise (fig.21)**. It will take about thirty seconds for a smooth flow of water to be obtained while air and any debris is being flushed from the shower. When there is a smooth flow of water, turn the temperature control steadily from **Fully Anti-Clockwise** to **Fully Clockwise** and back again several times to release any trapped air within the unit.
- Once flushing out has been completed, stop the water flow by pressing the **Start/Stop** button.
- Fit the showerhead to the flexible hose and place in the showerhead holder.
- The shower is now ready for normal operation.

Instructions for installers and service engineers only

CLEANING THE FILTER

It is recommended that the filter is periodically cleaned in order to maintain the performance of the shower. It is essential that this operation is carried out by a competent person.

- **SWITCH OFF** the electricity and water supply at the mains.
- The inlet filter is situated inside the water inlet fitting **(fig.22)**.
- To gain access to the filter, remove the cover and bottom trimplate.
- Unscrew the filter cap from the bottom of the inlet pipe.
- Inspect the 'O' ring for damage when the filter cap is removed.
- When cleaning the filter, **DO NOT** use a sharp object, as it will cause damage. It is preferable to use an old toothbrush or similar.
- To reassemble, follow the procedure in reverse.
- Make sure that the sealing 'O' ring is in place.
- **DO NOT** over tighten the filter cap on reassembly.

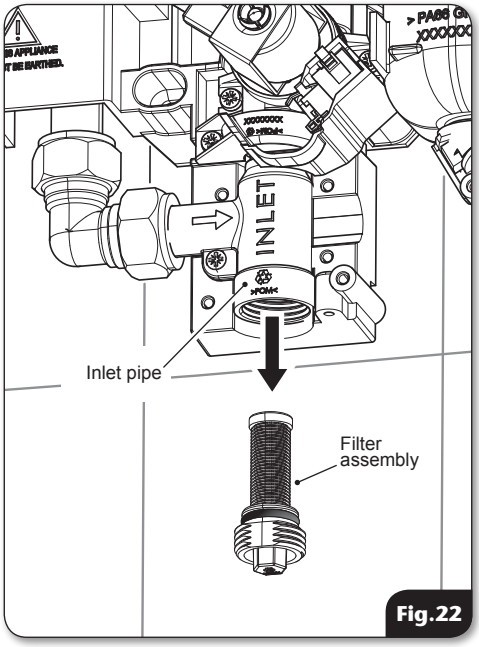

Fig.22

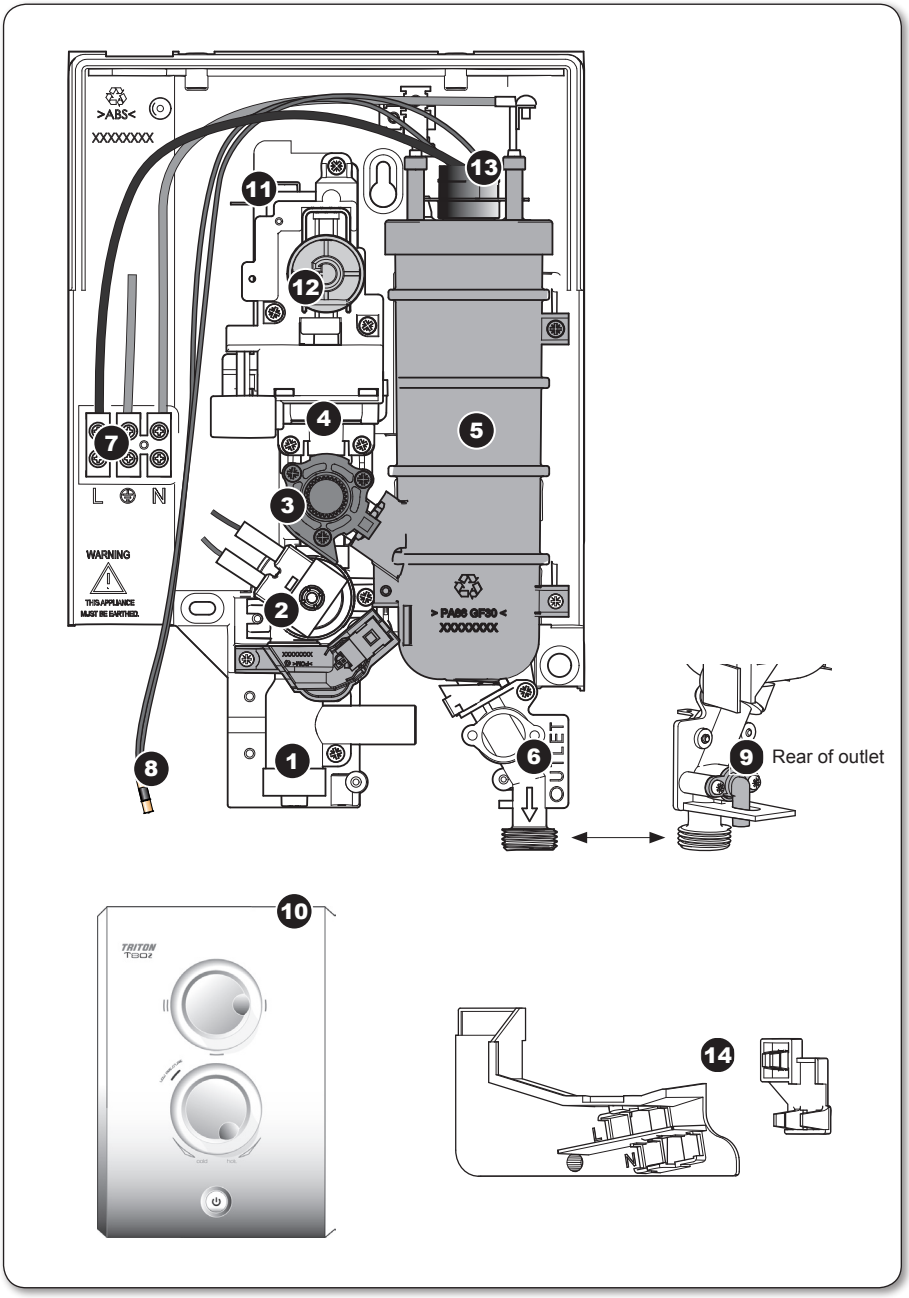
>ABS<
XXXXXXXX
L N
WARNING
THIS APPLIANCE MUST BE EARTHED.
> PA66 GF30 <
XXXXXXXX
OUTLET
Rear of outlet
TRITON
T80Z
N
1
2
3
4
5
6
7
8
9
10
11
12
13
14

SPARE PARTS

Ref.	Description	Part No.	Model
1.	Inlet Filter Assembly	P22611004	
2.	Solenoid Valve	P22610801	
3.	Stabilising Valve	P22640800	
4.	Pressure Switch Module	P22611003	
5.	Can & Element Assembly	83314790	(7.5kW)
		83314800	(8.5kW)
		83314810	(9.5kW)
		83314820	(10.5kW)
	Eco can 8.5kW	83314830	(Eco can, includes 6L/min Flow Regulator)
6.	Outlet Pipe and PRD	S22641002	
7.	Terminal Block &	S82201250	(White, Satin & Eco)
	Start/Stop switch	S82201260	(Chrome)
8.	Power Neon	P22610903	
9.	Pressure Relief Device (PRD)	82800450	
10.	Cover Assembly	P22640600	(White)
		P22640601	(Chrome)
		P22640602	(Satin)
		P22640603	(Eco)
11.	Microswitch (X2 supplied)	83314240	
12.	Switch carriage top	P22611001	
13.	Thermal Cut-Out (TCO)	22012340	
14.	T80Z Uni-Fit Kit (complete kit)	SPZUFIT	(Not supplied unless otherwise stated)
	Pipe Trim	7053825	(White)
		7053833	(Chrome)
		7053835	(Satin)

Important: Switch off the electricity at the mains supply and remove the circuit fuse before attempting any fault finding inside the unit.

Problem/Symptom	Cause	Action/Cure
1 Shower inoperable, no water flow.	**1.1** Interrupted power supply.	**1.1.1** Blown fuse or circuit breaker. Check supply Renew or reset fuse or circuit breaker. If it fails again, consult a qualified electrician.
		1.1.2 Power cut? Check other appliances and if necessary, contact local Electricity Supply Company.
	1.2 No mains water supply to shower.	**1.2.1** Check if isolating valves are fully open. Check for a blockage in inlet filter or in pipework.
	1.3 Unit malfunction.	**1.3.1** Have unit checked. Ring Customer Service.
2 Water too hot.	**2.1** Not enough water flowing through the shower.	**2.1.1** Increase flow rate via temperature control.
		2.1.2 Blocked showerhead — clean or replace blocked sprayplate in showerhead.
	2.2 Blockage in supply.	**2.2.1** Check if stop valves are fully open. Check if a blockage in the inlet filter.
	2.3 Increase in ambient water temperature.	**2.3.1** Readjust flow rate to give increased flow.
		2.3.2 Select 'economy' power.
3 Water temperature cycling hot/cool at intervals.	**3.1** Heater cycling on thermal cut-out.	**3.1.1** See *'Water too hot'* causes 2.1, 2.2 and 2.3 and their appropriate action/cures. If it continues, contact Customer Service.
4 Water too cool or cold.	**4.1** Too much flow.	**4.1.1** Reduce flow rate via temperature control.
	4.2 Water pressure below minimum required *(see rating label)*.	**4.2.1** Is water supply mains or tank fed?
		4.2.2 If tank fed, replumb to mains water supply or *see 4.2.4.*
		4.2.3 If mains fed, make sure that mains stopvalve is fully open and that there are no other restrictions in the supply while shower is in use, or *see 4.2.4.*
		4.2.4 Fit pump to give minimum pressure *(see rating label)*. Contact Customer Service for advice.

Important: Switch off the electricity at the mains supply and remove the circuit fuse before attempting any fault finding inside the unit.

Problem/Symptom	Cause	Action/Cure
4 Water too cool or cold - *continued*	**4.3** Reduction in ambient water temperature.	**4.3.1** Readjust flow rate to give reduced flow.
		4.3.2 Select 'high' power.
	4.4 Electrical malfunction or safety cut-out operated.	**4.4.1** Have unit checked by suitably qualified electrician or contact Customer Service.
5 Shower varies from normal temperature to cold during use.	**5.1** Water pressure has dropped below minimum required.	**5.1.1** Wait until the water pressure resumes to normal.
6 Pressure relief device has operated *(water ejected from PRD tube).*	**6.1** Blocked showerhead.	**6.1.1** Clean or replace blocked sprayplate in showerhead and then fit new PRD.
	6.2 Twisted/blocked flexible shower hose.	**6.2.1** Check for free passage through hose. Replace the hose if necessary and fit new PRD.
	6.3 Showerhead not removed while commissioning.	**6.3.1** Fit new PRD. Commission unit with showerhead removed.
	6.4 Water pressure above specified maximum for unit *(see rating label).*	**6.3.1** Fit pressure reducing valve to inlet and then fit new PRD.
7 Shower fails to shut off flow when Start/Stop button is pressed.	**7.1** Faulty Start/Stop switch.	**7.1.1** Replace switch.
	7.2 Debris in solenoid valve.	**7.2.1** Replace solenoid valve.
	7.3 Unit malfunction.	**7.3.1** Have unit checked. Ring Customer Service.

NOTE: *Identify cause of operation before fitting new PRD unit.*
When fitting a new PRD, follow the commissioning procedure.

It is advised all electrical maintenance/repairs to the shower should be carried out by a suitably qualified person.

In the unlikely event of a fault occurring please contact Triton Customer Service. DO NOT remove the shower from the installation.

WEEE Directive – Policy Statement

As a producer and a supplier of electric showers, Triton Showers is committed to the protection of the environment via our own environmental policy and the compliance with the **WEEE directive**.

Triton Showers is fully registered with the Environment Agency under the following schemes:

Repic: Producers take-back scheme (PTS), registration number WEE/EJ3466QV

Valpak: Distributor take-back scheme (DTS), registration number 9659

All our electric products are labelled accordingly with the crossed out wheeled bin symbol. This indicates, for disposal purposes at end of life, that these products must be taken to a recognised collection points, such as local authority sites/local recycling centres; this will be free of any charges. **Do not return to Triton Showers.**

UK SERVICE POLICY

In the event of a product fault or complaint occurring, the following procedure should be followed:

1. Telephone Customer Service on **0844 980 0750** having available, your details including post code, the model number and power rating of the product, together with the date of purchase and, where applicable, details of the particular fault.
2. If required, the Customer Service Advisor will arrange for a qualified engineer to call.
3. All products attended to by a Triton service engineer must be installed in full accordance with the Triton installation guide applicable to the product. *(Every product pack contains an installation guide, however, they can also be bought via our Customer Service Spares Department).*
4. Our engineer will require local parking and if a permit is required this must be available to the engineer on arrival at the call.
5. It is essential that you or an appointed representative *(who must be over 18 years of age)* is present for the duration of the service engineer's visit. If the product is in guarantee you must produce proof of purchase.
6. Where a call under the terms of guarantee has been booked and the failure is not product related *(i.e. scaling and furring, incorrect water pressure, pressure relief device operation or electrical/plumbing installation fault)* a charge will be made. A charge will also be issued if nobody is at home when the service engineer calls or adequate parking/permit is not available.
7. If the product is no longer covered by the guarantee an up front fixed fee will be charged before the site visit.
8. Should proof of purchase not be available on an "in-guarantee" call, or should the service engineer find that the product is no longer under guarantee, the engineer will charge the same fixed price and the customer will be expected to pay the engineer before he leaves. If payment is not made on the day an administration charge will be added to the fixed charge.
9. If a debt is outstanding from a previous visit, or from any other Triton purchase. Triton reserves the right to withhold service until the debt has been settled.
10. Triton takes the health, safety and wellbeing of its employees very seriously and expects customers to treat all staff members with respect. Should any employee feel threatened or receive abuse, either verbally or physically, Triton reserves the right to withhold service and will support the employee with a legal prosecution.

Replacement Parts Policy

It is the policy of Triton Showers to maintain parts availability for the duration of production and a period of 5 years thereafter in accordance with industry standards. In the event of a spare part not being available a substitute part will be supplied.

Spare parts can be ordered via our online spare parts store, or by telephoning Triton Spares Department. Payment should be made by credit/debit card *(excluding American Express or Diners Card)*. Payment can also be made by pre-payment of a pro-forma invoice, by cheque or postal order.

Telephone orders are based on information given during of the call. Before contacting Triton, please verify your requirements using the information contained in the user guide. Triton cannot accept liability for incorrect part identification.

TRITON STANDARD GUARANTEE

Triton guarantee this product against all mechanical and electrical defects arising from faulty workmanship or materials for a period of two years for domestic use only, from the date of purchase, provided that it has been installed by a competent person in full accordance with the fitting instructions.

Any part found to be defective during this guarantee period we undertake to repair or replace at our option without charge so long as it has been properly maintained and operated in accordance with the operating instructions, and has not been subject to misuse or damage.

This product must not be taken apart, modified or repaired except by a person authorised by Triton. This guarantee applies only to products installed within the United Kingdom and does not apply to products used commercially. This guarantee does not affect your statutory rights.

What is not covered:

1. Breakdown due to: ***a)*** use other than domestic use by you or your resident family; ***b)*** wilful act or neglect; ***c)*** any malfunction resulting from the incorrect use or quality of electricity, gas or water or incorrect setting of controls; ***d)*** failure to install in accordance with this installation guide.
2. Claims for missing parts once the product has been installed.
3. Repair costs for damage caused by foreign objects or substances.
4. Total loss of the product due to non-availability of parts.
5. Compensation for loss of use of the product or consequential loss of any kind.
6. Call out charges where no fault has been found with the appliance.
7. Call out charges where the water supply cannot be isolated, this includes consequential losses arising from unserviceable supply valves.
8. The cost of repair or replacement of pressure relief devices, showerheads, hoses, riser rails and/or wall brackets, isolating switches, electrical cable, fuses and/or circuit breakers or any other accessories installed at the same time.
9. The cost of routine maintenance, adjustments, overhaul modifications or loss or damage arising therefrom, including the cost of repairing damage, breakdown, malfunction caused by corrosion, furring, pipe scaling, limescale, system debris or frost.

For the latest Terms & Conditions, please see:
www.tritonshowers.co.uk

Triton Showers
Triton Road
Nuneaton
Warwickshire CV11 4NR

Triton is a division of Norcros Group (Holdings) Limited

Customer Service: ☎ 0844 980 0750

Trade Installer Hotline: ☎ 0844 980 0730
Fax: 0844 980 0744

www.tritonshowers.co.uk

E-mail: serviceenquiries@tritonshowers.co.uk

Extended Warranty AVAILABLE NOW. Call 0844 980 0740 for more details.

TRITON reserve the right to change product specification without prior notice. E&OE. © TRITON SHOWERS 2012